T.C.
TED UNIVERSITY
GRADUATE SCHOOL
PSYCHOLOGICAL COUNSELING AND GUIDANCE

RELATIONSHIP BETWEEN POSTTRAUMATIC GROWTH AND UNFINISHED BUSINESS AMONG EARTHQUAKE SURVIVORS

ELİF TORUN

ANKARA, 2025

RELATIONSHIP BETWEEN POSTTRAUMATIC GROWTH AND UNFINISHED BUSINESS AMONG EARTHQUAKE SURVIVORS

A Thesis Submitted To
The Graduate School
of
TED University

by

Elif Torun

In Partial Fulfillment of The Requirements
For
The Degree of Master of Science
In
Psychological Counseling and Guidance

Ankara, 2025

Approval of the Graduate School

Prof. Dr. Ayça Tekin Koru
Dean, Graduate School

Assoc. Prof. Dr. Tolga Erdoğan
Program Chair

This is to certify that we have read this thesis and that in our opinion it is fully adequate, in scope and quality, as a thesis for the degree of Master of Science.

Asst. Prof. Dr. Begüm Serim-Yıldız
Supervisor

Examining Committee Members

Prof. Dr. Nilüfer Havva Voltan Acar (Committee Chair)

Asst. Prof. Dr. Begüm Serim-Yıldız

Prof. Dr. Meliha Tuzgöl Dost

I hereby declare that all information in this document has been obtained and presented in accordance with academic rules and ethical conduct. I also declare that, as required by these rules and conduct, I have fully cited and referenced all material and results that are not original to this work.

Name, Last name : Elif Torun

Signature :

ABSTRACT

RELATIONSHIP BETWEEN POSTTRAUMATIC GROWTH AND UNFINISHED BUSINESS AMONG EARTHQUAKE SURVIVORS

ELİF TORUN

Master of Science, Psychological Counseling and Guidance

Supervisor : Assst. Prof. Begüm Serim-Yıldız

May, 2025

The main purpose of the study is to examine the relationship between posttraumatic growth (PTG) and unfinished business among adult survivors of Kahramanmaraş-centered earthquake on February 6, 2023. The expanded version of the Posttraumatic Growth Inventory (PTGI-X) was used to assess posttraumatic growth with five dimensions, while the Unfinished Business in Bereavement-Short Form was employed to measure unfinished business with two dimensions. Data were collected from 419 adults who experienced the earthquake directly in Kahramanmaraş on February 6th and lost a loved one, recruited through snowball sampling. The collected data were analyzed using Canonical Correlation Analysis (CCA) in the R program. The dataset representing posttraumatic growth consisted of the subdimensions: relationship with others, personal strength, appreciation of life, new possibilities, and spiritual/existential change; whereas the dataset for unfinished business included the subdimensions: unfulfilled wishes and unresolved conflicts. The study is based on Tedeschi and Calhoun's functional-descriptive model of posttraumatic growth and addresses unfinished business as a Gestalt therapy concept, integrating with other core Gestalt principles. The findings showed that unfinished business was negatively associated with certain aspects of posttraumatic growth, while it also appeared to facilitate growth in specific domains of posttraumatic experience. The study

contributes to psychological counseling by emphasizing the importance of addressing unfinished business in post-disaster trauma work and grief interventions. Considering Türkiye's status as a disaster-prone country, the findings offer functional implications for developing effective, contextually appropriate psychological support strategies in both current and future nature-oriented disaster contexts.

Keywords: *Posttraumatic growth, unfinished business, earthquake*

ÖZ

DEPREMDEN SAĞ KURTULAN BİREYLERDE TRAVMA SONRASI BÜYÜME İLE BİTİRİLMEMİŞ İŞLER ARASINDAKİ İLİŞKİNİN İNCELENMESİ

ELİF TORUN
Yüksek Lisans, Rehberlik ve Psikolojik Danışmanlık
Tez Yöneticisi : Dr.Öğr.Üyesi Begüm Serim-Yıldız

Mayıs, 2025

Bu çalışmanın temel amacı, 6 Şubat 2023 tarihinde meydana gelen Kahramanmaraş merkezli depremden sağ kurtulan ve deprem kaynaklı kayıp yaşayan yetişkinler arasında travma sonrası büyüme (PTG) ile bitirilmemiş işler arasındaki ilişkiyi incelemektir. Travma sonrası büyüme beş boyutta değerlendirilmek üzere genişletilmiş versiyonuyla Travma Sonrası Büyüme Envanteri (PTGI-X), bitirilmemiş işler ise iki boyutta değerlendirilmek üzere Kayıp Yaşantılarında Bitmemiş İşler-Kısa Formu kullanılmıştır. Veriler, 6 Şubat'ta Kahramanmaraş'ta depreme doğrudan maruz kalmış ve bir yakınını kaybetmiş 419 yetişkinden kartopu örnekleme yöntemiyle toplanmıştır. Elde edilen veriler R programında Kanonik Korelasyon Analizi (CCA) ile analiz edilmiştir. Travma sonrası büyümeye ilişkin veri seti; kişilerarası ilişkiler, kişisel güç, yaşam takdiri, yeni olasılıklar ve inançsal-varoluşsal değişim alt boyutlarından oluşurken; bitirilmemiş işlere ilişkin veri seti ise gerçekleşmemiş yaşantılar ve çözümlenmemiş çatışmalar alt boyutlarından oluşmaktadır. Çalışma, travma sonrası büyümenin Tedeschi ve Calhoun'un işlevsel-betimsel modeli temel alınarak gerçekleştirilmiş ve bitirilmemiş işler, Gestalt terapisi kavramı olarak ele alınmış; Gestalt'ın temel ilkeleriyle birlikte ele alınmıştır. Bulgular, bitirilmemiş

işlerin alt boyutlarının travma sonrası büyümenin bazı boyutlarıyla negatif ilişki gösterdiğini, ancak travma sonrası büyüme deneyimin bazı alanlarında destekleyici bir rol de üstlenebildiğini ortaya koymuştur. Bu çalışma, afet sonrası travma çalışmaları ve yas müdahalelerinde bitirilmemiş işlerin ele alınmasının önemini vurgulayarak psikolojik danışma alanına katkıda bulunmaktadır. Türkiye'nin afet açısından riskli bir ülke olması dikkate alındığında, bulgular mevcut ve gelecekteki olası doğa kaynaklı afet bağlamlarında etkili ve bağlama uygun psikolojik destek stratejilerinin geliştirilmesi açısından işlevsel çıkarımlar sunmaktadır.

Anahtar Kelimeler: *Travma sonrası büyüme, bitirilmemiş işler, deprem*

To the survivors of the February 6 Kahramanmaraş earthquake,
and in memory of those who lost their lives

ACKNOWLEDGMENTS

Throughout my master's program, I was fortunate to have had my thesis advisor, Assistant Prof. Begüm Serim-Yıldız, whose invaluable guidance, sincere support, and knowledge sharing were essential throughout the process. Beyond her academic contributions, she deepened my intellectual world by sharing her experiences with me and was always there whenever I needed support. She continuously motivated me at every stage of the process, helping me maintain my enthusiasm for my work; she was one of the most important driving forces behind the progress and completion of my research. Most importantly, she embraced my passions and dreams, accompanying me as I transformed them into real-life experiences and helped me build the foundation for the goals I set for myself. For all of this, I feel incredibly fortunate.

Throughout my undergraduate and master's education, I would like to thank my esteemed professors, Prof. Nilüfer Havva Voltan Acar, Asst. Prof. Olcay Yılmaz, Asst. Prof. Kürşad Demirutku, Asst. Prof. Selin Onaylı, Asst. Prof. Nafi Ayköse, Asst. Prof. S. Burcu Özgülük Üçok, and Asst. Prof. Fatma Zehra Ünlü Kaynakçı, who served as a sources of inspiration through their professional stance and perspectives, guided my academic and professional development, and have always been exemplary figures in various ways. I would also like to extend my gratitude to TED University, where I spent the most wonderful years of my life.

I sincerely thank my director, Dr. Melike Kavuk Kalender, for her guidance during the data collection and participant recruitment process, as well as for her genuine interest in and continuous support of all my academic work. In this regard, I would like to sincerely thank the Hatay Medeniyetler Choir and Choir Conductor Yılmaz Özfırat, as well as the Buradayız Hatay Association. I also thank Metin Acıpayam, who helped me reach a significant portion of my sample; my dear friend Burcu Karakaş, who supported me at every stage of the process; and my student, Mehmet Özbir who has been like a younger brother to me, for their valuable contributions for

data collection. I would also like to express my gratitude to Asst. Prof. Merve Şahin Kürşad for her guidance and support during the data analysis process.

My master's education and research journey have not only allowed me to develop academic knowledge and skills but also provided an important opportunity to get to know myself better, recognize my limits and potential, and reevaluate my priorities. Sharing this entire process with my classmates in the master's program made it even more enjoyable; I thank them all. In addition, I am grateful to all my friends and loved ones who patiently waited for the moments I was available and whose emotional support I always felt throughout my master's studies. I am so lucky to have them.

During the process of determining my thesis topic, in addition to my academic interests, the field interviews I conducted with individuals who survived the earthquake had a significant impact. The survivors, who made it possible for me to gain this experience, provided an important starting point for shaping my thesis and contributed to the deepening of my perspective on life. I sincerely thank all the survivors who allowed me to get to know them and share their experiences. Furthermore, the lessons I gained from their experiences and perspectives on life have been extremely valuable and meaningful to me.

There is another group that deepened my perspective on the world and holds a very special place in my life. The presence and sincere affection of full scholarship university students have helped me see life from a deeper and more meaningful perspective. I wholeheartedly thank each of them for the meaning they have added to my life, the sincere bonds we have shared, and the life lessons I have learned from them. I am so grateful that our paths crossed.

Finally, I would like to thank my mother and father, who respected my decisions, gave me the space to make my own choices, supported my educational journey, and played a significant role in enabling me to stand on my own feet, for allowing me the freedom to build my life through my own decisions. I also thank my beloved grandmother, who always followed the events in my life with great curiosity, consistently showed her interest, and became like a third parent to me.

TABLE OF CONTENTS

PLAGIARISM iii

ABSTRACT iv

ÖZ vi

ACKNOWLEDGMENTS ix

TABLE OF CONTENTS xi

LIST OF TABLES xiv

LIST OF FIGURES xv

LIST OF ABBREVIATIONS xvi

1. INTRODUCTION 1

1.1. Background of Study 1

1.2. Purpose of the Study 7

1.3. Significance of the Study 8

1.4. Definition of the Terms 10

2. LITERATURE REVIEW 11

2.1. Trauma 11

2.1.1. Definition of Trauma 11

2.1.2. Theoretical Framework of Trauma 13

2.1.3.1. Posttraumatic Stress Disorder 25

2.1.3.2. Posttraumatic Growth: Conceptualization and Models 28

2.2. Unfinished Business 44

2.2.1. Nature and Definition of Unfinished Business 44

2.2.2. Unfinished Business in Bereavement 46

2.3. Relationship between Unfinished Business and Posttraumatic Growth in the Context of Disasters 49

3. METHOD 56

3.1. Research Design....56
3.2. Participants....56
3.4. Instruments....60
3.4.1. Demographic Information Form....60
3.4.2. Unfinished Business in Bereavement Scale-Brief Form....60
3.5. Procedure....61
3.5. Data Analysis Procedure....62
3.6. Limitations of the Study....63
4. RESULTS....64
4.1. Data Screening and Assumption Checks....64
4.1.1. Descriptive Statistics for Variables....66
4.2. Confirmatory Factor Analysis....68
4.2.1. Confirmatory Factor Analysis of Unfinished Business in Bereavement Scale (UB)....69
4.2.2. Confirmatory Factor Analysis of Posttraumatic Growth Inventory (PTGI-X)....70
4.3. Reliability Analysis....72
4.4. Canonical Correlation Analysis....73
5. DISCUSSION....80
5.1. Discussion of Findings....80
5.1.1. Relationship with Others and Unfinished Business....85
5.1.2. Personal Strength and Unfinished Business....85
5.1.3. Appreciation of Life and Unfinished Business....86
5.1.4. New Possibilities and Unfinished Business....87
5.1.5. Spiritual & Existential Change and Unfinished Business....88
5.2. Conclusion....89

5.3. Implications for Research and Practice....90
5.4. Recommendations for Further Research....91
REFERENCES....93
APPENDICES....121
A. APPROVAL OF THE ETHICS COMMITTEE....121
A-2. OTHER PERMISSIONS....123
B. INFORMED CONSENT FORM....125
C. INSTRUMENTS....127
E. THESIS PERMISSION FORM....128

LIST OF TABLES

Table 1. Demographic Characteristics of the Sample 57

Table 2. Results of Multicollinearity 65

Table 3. Descriptive Statistics for CFA and CCA Datasets 67

Table 4. CFA Fit Indices for UBBS-SF 69

Table 5. Goodness-of-Fit Analysis Results for PTGI-X 71

Table 6. Cronbach's Alpha Values for All Scales and Subscales 72

Table 7. Canonical Correlations 73

Table 8. Standardized Canonical Loadings 74

Table 9. Canonical Loadings, Structure Coefficients and Cross Loadings 76

Table 10. Redundancy Analysis 77

LIST OF FIGURES

Figure 1 Path Diagram for the Unfinished Business in Bereavement Scale..... 70
Figure 2 Path Diagram for the Posttraumatic Growth Inventory – Expanded..... 71
Figure 3 Representation of the Variables for Canonical Correlation Analysis..... 79

LIST OF ABBREVIATIONS

CCA	Canonical Correlation Analysis
CFA	Confirmatory Factor Analysis
CRED	Centre for Research on the Epidemiology of Disasters
DSM-5	Diagnostic and Statistical Manual of Mental Disorders, 5th Edition
EM-DAT	Emergency Events Database
PTSD	Posttraumatic Stress Disorder
PTG	Posttraumatic Growth
PTGI-X	Posttraumatic Growth Inventory – Expanded Form
UB	Unfinished Business
UBBS-SF	Unfinished Business in Bereavement Scale – Short Form
UNFPA	United Nations Population Fund
WHO	World Health Organization

CHAPTER 1

1. INTRODUCTION

1.1. Background of the Study

Wars, nature-oriented disasters, sexual abuse, physical violence, and the sudden death of a loved one are events that can be extremely challenging, terrifying, and have the potential to disrupt daily life for people. Events with potentially traumatic effects similar to these can be experienced by 70% of people worldwide (WHO, 2024). Benjet et al. (2015) categorized 29 different types of potentially traumatic events in their study conducted with approximately 70,000 participants from 24 different countries to assess the frequency of traumatic experiences. Accordingly, more than 70% of the participants reported having at least one traumatic experience in their lifetime.

According to the Disaster and Emergency Management Authority (2023), an average of 70 disasters and crisis situations are reported in Türkiye every month and 20% of these disasters are caused by natural events. In investigating the destruction and damage inflicted by nature-oriented disasters globally in the past year, The Emergency Events Database (EM-DAT) indicates that Türkiye has been identified as the nation most impacted by nature-oriented disasters, attributed to fatalities and economic losses resulting from earthquakes (Centre for Research on the Epidemiology of Disasters [CRED], 2023). The Presidency of Strategy and Budget of the Republic of Türkiye (2023) has documented 269 earthquakes over the past 24 years that resulted in casualties and property damage. This analysis indicates that 1992 Erzincan and 1999 Marmara earthquakes are recognized as the two most destructive earthquakes in Türkiye up until 2023. The published examination indicates that the earthquake centered near Kahramanmaraş on February 6 resulted in the most extensive destruction to date. It has been established that approximately 50,000

individuals perished due to the earthquake, and over 500,000 structures have become uninhabitable. Moreover, significant interruptions have arisen from the damage to systems associated with education and healthcare services resulting from the earthquake. The World Health Organization (2023a) emphasized that psychosocial and mental health interventions for survivors should be prioritized in the planning for these survivors of earthquakes considering psychological damage. Yıldırım et al. (2023) emphasized that when considering Kahramanmaraş earthquake, mental health interventions for large-scale mass traumas should be structured by assessing the conditions that remain after the destruction caused by the earthquake, considering the devastation it created, the helplessness it instilled in society, and the multiple losses. They suggest that especially when there is a high level of loss and destruction, individuals may be more affected and traumatized, and the difficulty in meeting basic needs can lead to a significant need for support.

The reactions of individuals to the traumatic event they experience, the degree of challenging emotions and cognitions they endure, and the implications for their daily functioning and process of understanding trauma may exhibit variability among different individuals (Amstadter & Vernon, 2008). In the face of disasters that significantly threaten an individual's life, safety, and quality of life, some people may gradually resume their regular routines and normal functioning over a period (Bonanno & Mancini, 2008). Normal functioning refers to the process of resuming one's previous capacity following a traumatic occurrence, characterized by temporary and tolerable disruptions rather than damaging or lasting impairments in everyday activities and overall functionality.

Moreover, a traumatic encounter might result in enduring, persistence, and detrimental repercussions on mental health. Approximately 3.9% of the global population are estimated to exhibit symptoms of posttraumatic stress disorder at a certain point in their lives (Koenen et al., 2017; WHO, 2024). Posttraumatic stress disorder symptoms can be quite devastating for people who have survived trauma, making it difficult to return to normal functioning and persisting as long-term effects, because these symptoms make it difficult for individuals to maintain their well-being, as well as to meet their daily and basic needs. Başoğlu et al. (2002) examined the psychological

effects of the earthquake on 1000 survivors living in different container cities following Marmara earthquake that occurred in Türkiye in 1999. About one year after the earthquake, 61% of the participants reported having intrusive thoughts, 25% experienced nightmares, 57% reported distress related to earthquake reminders, 39% experienced a general loss of interest, and 35% reported sleep problems. At the same time, a depressive mood and a sense of hopelessness are prominent among the participants. When the risk factors for traumatic stress symptoms were investigated, factors such as the fear felt at the moment of the event, being trapped under rubble, losing family members or loved ones, material losses, and injuries were found to be significantly risky. Changes in traumatic stress symptoms or a reduction in trauma symptoms are anticipated over time. Nonetheless, in extensive and catastrophic occurrences such as earthquakes, these impacts may endure throughout a long time. Önder et al. (2006) examined the posttraumatic stress disorder and other possible accompanying diagnoses of 683 survivors three years after Marmara earthquake. Three years after the earthquake, posttraumatic stress disorder symptoms were still found to be the most common among the participants (19.2%).

Another possibility as an effect of potentially traumatic event that significantly impacts individuals' quality of life and psychological functionality as a lasting effect of trauma is posttraumatic growth. Posttraumatic growth that includes process and outcome together, unlike growth inherent to developmental stages, emerges as a result of efforts towards processing, making sense of, coping with, and surviving a serious, challenging, and threatening traumatic event (Tedeschi et al., 2018). Relatedly, the concept of resilience, encompassing resistance or coping capacity, the concept of optimism, including positive expectations or hopes, the expectation of individuals with hardiness to control events or have an impact in the face of events, and the adaptability and sense-making capacities of individuals with a sense of coherence may exhibit similarities with the concept of posttraumatic growth (Tedeschi et al., 2017). Unlike other related concepts, posttraumatic growth inherently involves transformative and lasting changes.

The process of posttraumatic growth occurs with the experience of the traumatic event. During this process, individuals handle the impact of challenging events on their lives

and their sense of self (Tedeschi & Calhoun, 2004). Consequently, they must re-evaluate their established core beliefs and fundamental worldview, a process that is notably complicated and emotionally demanding. The process component of posttraumatic growth includes the stages of struggle, rebuilding, evaluation, and meaning-making that an individual experiences following a traumatic event (Tedeschi et al., 2018). As a result of this process, the traumatic event gains a new meaning; throughout the evaluation and restructuring process, individuals gain certain awareness from the event they experienced and define it as a turning point in their life stories. The transformative effects of the meanings derived from this can be experienced in relationships with others, the person's life philosophy, and the individual's perspective on themselves as a result of posttraumatic growth (Tedeschi & Calhoun, 1995). Transformative changes in these areas have been categorized "personal strength, relationship with others, appreciation of life, new possibilities in life, and spiritual change" (Tedeschi & Calhoun, 1996, p.464; Tedeschi et al., 2017, p.11).

The prevalence of posttraumatic growth, which is another possible trauma reaction, is noticeably common among trauma survivors. Wu et al. (2019) conducted a systematic review and meta-analysis to determine the prevalence of posttraumatic growth. In the analysis of 26 research encompassing over 10.000 participants, it was shown that the moderate or high posttraumatic growth rate among individuals with various traumatic experiences was 52.58%. In addition, analysis of the time elapsed since the event and the level of posttraumatic growth reveals that one-year post-event, there is a notable increase in rates of posttraumatic growth. In the findings regarding the relationship between demographic characteristics in terms of gender and age and posttraumatic growth, specifically it was concluded that the rates of posttraumatic growth were significantly higher among women and young adults.

The posttraumatic growth theory considers the magnitude of the disruption and challenge in a person's worldview and self-perception as an opportunity for growth to occur (Tedeschi et al., 2017). In parallel, Ergün and Şenyüz (2021), seven years after Van earthquake, examined the posttraumatic growth experience with approximately 1000 participants who had experienced the earthquake. Accordingly, the levels of

posttraumatic growth in participants who lost loved ones and relatives due to the earthquake were found to be significantly higher compared to those who did not experience traumatic loss. Different from demographic variables, perceived social support and religious commitment are among the supportive factors for posttraumatic growth, especially in experiences involving the loss of a loved one (Ryan & Ripley, 2021). In addition, in the context of nature-oriented disasters, Garcia and the colleagues (2014) examined posttraumatic growth among Chile earthquake survivors and identified that social support and positive religious coping are the two primary predictors of posttraumatic growth. Specifically, besides the role of social support to promote posttraumatic growth, it is also found to be crucial to functions as a protective factor against posttraumatic stress symptoms (Jia et al., 2015).

In the content of therapeutic interventions provided to survivors after the trauma experience, the focus is on reducing symptoms of posttraumatic stress disorder. However, in this process, it is important to support posttraumatic growth to provide trauma resolution for those who have survived trauma without ignoring posttraumatic stress symptoms (Tedeschi et al., 2018). The notion of posttraumatic growth acknowledges the adverse impacts of trauma while highlighting the potential for reconstructing and reinterpreting one's world and self through these effects. At this point, it is critically important to identify not only the factors that support posttraumatic growth but also the threat elements that hinder growth, in order to develop appropriate interventions and alleviate the barriers to growth experiences for people who have survived trauma.

In major and widespread nature-oriented disasters, abrupt and traumatic losses are the primary factors that transform a natural event into a disaster. Traumatic responses resulting from a nature-oriented disaster may involve various losses (Norris et al., 2002; Ursano et al., 2003). Individuals, alongside losses of physical health, economic status, housing, and social resources, experience the abrupt deaths of family members, loved ones, or relatives due to a nature-oriented disaster. Unexpected losses can undermine individuals' faith in predictability, and the absence of an opportunity to express farewell or share unexpressed emotions can lead them to struggle with a range of complicated feelings, including pain, grief, shock, and confusion (Walsh, 2007).

Especially in cases involving unresolved issues and conflicts between surviving and the deceased, individuals often experience increasingly complicated emotions (Austin & Godleski, 1999). This circumstance also represents a risk factor for severe and significant psychological consequences (Norris et al., 2002). In this context, from Gestalt therapy, unfinished business can include unresolved situations or conflicts from the past, feelings, thoughts and dreams about a deceased person. Unfinished business from the past can be a symptom of trauma related to a traumatic event, which can severely disrupt an individual's normal functioning (Joyce & Sills, 2001). While the loss of a loved one can be a major challenging experience for individuals, disaster-related losses occur in a more devastating, sudden, and unexpected manner. For survivors, the disaster experience is akin to a near-death experience, and individuals may witness the death of their loved ones (Kristensen et al., 2012). In addition, large-scale and devastating disasters like Kahramanmaraş earthquake, people may not even be able to reach the deceased bodies of their loved ones, leading them to experience ambiguous loss. In such situations, the pain and distress experienced by individuals can be accompanied by intense grief, confusion, conflict, uncertainty and guilt due to the lack of an opportunity to say goodbye to their loved ones. At the same time, since individuals cannot even reach the deceased body of their loved ones, they cannot fulfill cultural duties and rituals such as funerals, which can make it difficult to say goodbye or accept the loss (Güler & Albayrak, 2024). With the effect of the challenging conditions in the earthquake zone, the inability to perform cultural rituals for the deceased or the inability to find the missing bodies indicate a more intense and painful disaster-related bereavement process (Norris & Wind, 2009). An analysis of the grief process for those who lost loved ones in the earthquake in Türkiye on February 6, 2023, pointed out the detrimental and disruptive consequences of missing cultural and religious practices because of the challenging conditions. A substantial number of participants reported interruptions in their grieving process because the funeral and burial procedures for their deceased loved ones were not performed according to tradition. Furthermore, it was emphasized that the participants demonstrated multidimensional grief responses across physical, emotional, cognitive, behavioral, and spiritual dimensions (Özcan, 2024).

Voltan-Acar (2015) also discusses the presence of unfinished business in a situation of loss, where the inability to say goodbye to the deceased is a result of unresolved conflicts, unspoken words, and unfulfilled experiences with that person. Eleven years after the 2003 Bam earthquake in Iran, a qualitative study was carried out with individuals who had survived the tragedy but had lost family members. As a result, the participants often reported feeling disinterested, meaningless, and hopeless. They underlined that being helpless to prevent their loved ones' deaths and not having the chance to say goodbye to them was the most painful part of the losses they suffered as a result of the earthquake (Tirgari et al., 2016). Perls (1969) highlights that, in addition to the emotions felt by individuals who have endured a loss, unfinished business also induce feelings of entrapment and despair, hindering the person's ability to attain insight, meaning, and an awareness of the present moment.

Specific experiential Gestalt therapy techniques, such as the empty chair, role-playing and role-reversal techniques address unfinished business in the therapy is solution-oriented in terms of resolving relationship dynamics in which individuals are stuck (Voltan-Acar, 2019;2024), reorganizing traumatic experiences, and offer an approach that supports posttraumatic growth with gaining a new perspective from traumatic event. In this way, it is possible to complete and resolve unfinished tasks during the therapy process (Copley & Carney, 2020).

1.2. Purpose of the Study

Regardless of whether traumatic events are the same or different, their impact on individuals or societies can vary, and the exposure to disasters and the effects on individuals or societies can also differ. The exposure to the earthquake of a person who lost their home as a result of the earthquake can differ from the exposure of a person who lost a loved one. In the literature, there are common focal points and intervention recommendations in studies examining nature-oriented disasters. However, it is necessary to evaluate the outcome of each disaster based on that disaster and develop interventions accordingly (Galea & Maxwell, 2009). The fact that each disaster has its own unique impact and consequences may indicate the need to identify the factors that should be considered in the posttraumatic growth processes of survivors and to develop specific interventions accordingly.

In this context, it is essential to identify the factors that influence posttraumatic growth in therapeutic treatments and to implement supporting approaches to comprehend the elements that impact posttraumatic growth both positively and negatively for Kahramanmaraş earthquake survivors. An examination of the literature reveals that the concept of unfinished business adversely and critically impacts persons' healing processes. This study primarily aims to examine the obstacles to posttraumatic growth in Kahramanmaraş earthquake survivors who lost their loved ones, while also assisting in the formulation of appropriate therapeutic interventions by mental health professionals, focusing on these obstacles to growth. Considering the concepts mentioned, theories, and studies, the problem of this research has been defined as follows:

- Is there a relationship between posttraumatic growth and unfinished business among 6th February earthquake survivors?

1.3. Significance of the Study

In the light of the issues and concepts discussed above, Türkiye is the third most seismically vulnerable country in the world, and more than 150,000 people are known to have died as a result of earthquakes from the 1900s to the present day. In addition, it is also known that 95% of the total population is under the threat of earthquakes. To date, more than 50,000 earthquake-related deaths have occurred in Türkiye (AFAD, 2019). The death toll has doubled with the occurrence of Kahramanmaraş earthquake on February 6, 2023 (WHO, 2023a). The Disaster and Emergency Management Authority (2019) also stressed that due to Türkiye's geographical location, large-scale earthquakes frequently occur, and consequently, significant loss of life and property is inevitable.

Besides the loss of life in the earthquake, there are serious multidimensional consequences for the survivors. In its assessment of the earthquake, the World Health Organization (2023b) highlighted the extremely difficult-to-predict psychological stress factors for those who experienced the earthquake. In addition to experiencing the earthquake, individuals have also faced events such as injuries, damage/destruction to their homes, and their city becoming uninhabitable. The

aftershocks following the 7.8 magnitude earthquake continuously created fear, panic, chaos, and uncertainty for the people in the region. Under the current conditions, people continued to help those trapped under the rubble and in need of assistance, despite all their losses. Due to the destruction caused by the earthquake and the challenging and unbearable conditions that followed, it is believed that one in five people will experience mental health issues within 10 years. Another report shows that at the end of the year after the earthquake on February 6, 2023, about 4 million earthquake survivors needed shelter due to damaged and destroyed homes. In the districts of Adıyaman, Kahramanmaraş, Malatya, Hatay, Gaziantep and Osmaniye, 760,000 people are already known to live in tents, container towns and other structures (UNFPA,2024). In addition, the World Health Organization (2023a; 2023b) stressed that effective psychosocial and mental health interventions for survivors should be among the top priorities in planning for these earthquake survivors.

In this context, the study examines the possible relationship between posttraumatic growth and unfinished business. Considering current studies, in the field of Psychological Counseling and Guidance in Türkiye, there is a significant gap in research and specific therapeutic interventions specifically addressing trauma related to nature-oriented disasters, with only a limited number of researchers drawing attention to this issue (Kardaş, 2013; Balcı, 2016; Yıldırım, 2022). In addition, following Kahramanmaraş earthquake, the psychological interventions applied specifically for the earthquake were evaluated with 16 psychological counselors involved in psychosocial support efforts. Accordingly, it has been determined that psychological counselors need to develop their knowledge and skills in the areas of disaster, trauma, and grief. As a result of the field experiences of psychological counselors, they have identified the need for specialized training in disaster and trauma topics, highlighted gaps in professional competence in this area, and thus revealed a lack of knowledge and skills in disaster, trauma, and grief topics. They have also highlighted the difficulties in interventions and practices due to the challenging conditions in earthquake areas (Mutlu & Koşan, 2024).

Examining the level of posttraumatic growth among nature-oriented disaster survivors, it is necessary to consider unfinished business that may be the critical factor

to complicate posttraumatic growth considering the loss of their loved ones. The inclusion of the unfinished business concept in interventions in the context of trauma counselling is believed to enhance trauma recovery and mental health for a disaster country in Türkiye, and to make significant contributions to the posttraumatic growth process for earthquake survivors. Because the study will focus on the posttraumatic growth processes of individuals affected by the earthquake on February 6, 2023, it is thought to be a decisive and integrating function for studies conducted both in the context of literature and psychological counseling implications.

1.4. Definition of the Terms

The definitions of the terms that are used in the study are given below:

- **Posttraumatic Growth:** refers to transformative changes with the dimensions of personal strength, relationship with others, appreciation of life, new possibilities in life, and spiritual change areas as a trauma reaction aftermath a seriously challenging and/or life-threatening experience (Tedeschi & Calhoun, 1996).

- **Unfinished Business in Bereavement:** refers to continuing issues with the deceased with two dimensions of unfulfilled wishes and unresolved conflicts related to the loss of the individual (Holland et al., 2018).

CHAPTER 2

2. LITERATURE REVIEW

The literature review will examine the variables pertinent to this study, including posttraumatic growth and unfinished business within various theoretical frameworks and concepts, incorporating both qualitative and quantitative findings. All variables related to the study will be addressed within the context of psychological trauma experience, the nature of trauma, and theories explaining trauma, with a particular focus on disasters.

2.1. Trauma

This section of the study will examine the definitions of trauma proposed by various theorists, highlighting the similarities and contrasts among these definitions, as well as the elements that define the essence of trauma. This discussion will focus on cognitive, biological-evolutionary, and cognitive processing models, psychoanalytic perspective and ecological systems model related to trauma, examining the impact of various trauma types on individuals and the multidimensionality and diversity of these impacts.

2.1.1. Definition of Trauma

The psychological trauma, often regarded as extraordinary life occurrences that are infrequently experienced due to their unexpected, sudden, and striking characteristics, is yet a component of daily life and a part of fundamental facet of human existence (Herman, 1992a; Howell & Itzkowitz, 2016) and every individual may have a potential for being a victim and exposed to it directly or indirectly (Breslau & Kessler, 2001). When considering extremely challenging, stressful, and threatening life events that are (Bufka et al., 2020) potential for causing traumatic effects, examples include harassment, rape, abuse, accidents, wars, sudden deaths, losses, disasters, and other experiences that threaten or induce fear, compromise a sense of control and security,

exceed an individual's coping capacity, and disrupt daily functioning (Black et al., 2021). Traumatic events can be firstly classified depending on who is exposed to both individuals and communities or populations (i.e., sexual violence versus earthquake) considering the magnitude, scope, destructiveness, intention, and impact of the event. Traumatic events that individuals exposed are categorized as intentional (i.e., rape) and unintentional (i.e., accidents) aside from its scope, magnitude, extent of impact, and destructiveness. On the other hand, traumatic events that affect communities or populations are examined in two categories: human-induced (i.e., war) and nature-oriented (i.e., earthquake, tornado) (Ursano et al., 2003). Events that are potentially traumatic and impact large populations, such as wars or nature-oriented disasters that escalate into catastrophes, are considered as such. Nonetheless, regardless of the impact's degree, individuals do not experience every challenging life event similarly, nor does it generate the same effects. However, the greatest common point among the different definitions and explanations of trauma is that it is a psychologically painful and challenging experience that exceeds individuals' current coping skills, surpasses their competencies and capacities, and thus disrupts their daily functioning (Howell & Itzkowitz, 2016).

From diagnostic perspective, according to American Psychological Association (2016), trauma is a reaction that described because of seriously physical, emotional, or psychological threatened and shocking event for individuals, their loved ones, family members or friends. As a distinguishing point, APA defines trauma by emphasizing that direct experience of the event is not only necessity for its occurrence. Witnessing the incident that makes one feel terrified and helpless indirectly or discovering that a loved someone has encountered a life-threatening and distressing occurrence might induce a traumatic impact (Gold et al., 2017). The American Psychiatric Association (2013) emphasizes the traumatic impact that can occur in these three different ways when determining the diagnostic criteria for disorders such as posttraumatic stress disorder, acute stress disorder, and adjustment disorders. In clinical assessments, this definition often serves as a foundational reference point for identifying trauma-related symptoms and understanding the individual’s response to traumatic events.

2.1.2. Theoretical Framework of Trauma

Although, there are shared emotions and common reactions of trauma (Amstadter & Vernon, 2008) it is also possible that individuals experiencing the same event may not show the same reactions or be affected with the same intensity (Herman, 1992b). In addition, people who experience different types of traumatic events (i.e., accidents, war, sexual assault, disaster) may show similar responses, psychological symptoms and problems (Stein et al., 2014). Upon analyzing the conditions that exacerbate and diversify trauma responses, specific factors have been demonstrated to be critical. Consequently, factors such as the degree to which the event endangers lives, the incidence of losses resulting from the event, the duration of exposure to the traumatic experience, the frequency or potential for recurrence of the event, the individual's involvement during the event, and whether this involvement induces internal conflict or moral responsibility may become prominent (Walker, 2017). To understand certain determinants that elucidate how, in what manner, and to what degree a challenging life event impacts an individual and becomes traumatic or problematic, various theoretical perspectives addressing the effects of trauma have been included.

2.1.2.1. Biological and Evolutionary Perspective

All living organisms, including animals, possess innate instincts essential for daily survival and for responding to perceived threats. Consequently, while fear and anxiety may initially appear as maladaptive or adverse emotions, their existence can act to evaluate the severity of a prospective threat. Experiencing these emotions triggers the mechanisms that have developed in our system to safeguard against hazards (Hrdy, & Sieff, 2015). From this viewpoint, like the predator-prey dynamic, remaining immobile in order to prevent becoming a target, retreating to distance oneself from imminent danger when preventing is unfeasible, or confronting the perilous situation when elimination of the threat is impossible are integral components of human survival mechanisms. These instincts protect the survival of both animals and humans in the presence of threats (Baldwin, 2013; Nesse & Sieff, 2015).

In the context of trauma, Kolk (2014) emphasizes human brain and body system are programmed to respond to a threat and to survive when faced with a serious threat. In

every human brain, pre-programmed escape plans emerge in response to a threat, and in situations of life-threatening danger, these plans of the brain are activated as fight, flight, or freeze responses. Since the brain is programmed to help individuals feel safe again and regulate stress hormones when they encounter danger, they feel the need to resist or flee in order to avoid harm and feel safe. When the oldest part of the brain triggers these plans, it has the ability to re-regulate stress hormones in situations where the fight, flight, or freeze response is effective as a defense and coping mechanism. When the alarmed organism engages in fight or flight responses by applying coping strategies in the face of perceived threat, it can discharge the accumulated energy from the nervous system and eliminate the threat (Herman, 2015). In situations where the threat persists, the fight response can transform into anger, while the flight response can lead to helplessness. On the other hand, when the brain perceives that there is not enough strength to fight or flee, it instinctively exhibits the freezing response. However, when immobility sets in, individuals exhibit freezing response, and if they cannot discharge the energy, they cannot resolve the threat (Levine, 1997). Katz and colleagues (2021) conducted a retrospective study with 180 adults who reported having experienced sexual abuse in childhood to examine automatic responses. In the information provided by the participants about their childhood sexual abuse experiences, it is known that 74.2% were chronically abused, and 59.7% reported that the abuser was a family member. Accordingly, it has been determined that the most common reaction among freezing, fighting, and fleeing responses is the freezing response. Additionally, it has been determined that individuals who exhibit freezing and dissociation responses are exposed to abuse for a longer duration. In the context of nature-oriented disasters, Özdemir et al. (2024) investigated the traumatic experiences associated with the earthquake involving 12 participants who survived Kahramanmaraş-centered earthquake on February 6, 2023. Interviews with participants indicated that they often displayed a freeze response. Participants reported experiencing bodily immobility and freezing, a sensation of time stagnation, and an inability to think clearly.

Despite being perceived as a threat, all three responses are considered the body's self-defense mechanisms and can be regarded as instinctive functional reactions aimed at minimizing the damage from the experienced event. The problematic point here is that

the reaction displayed during the event continues even after the event, which makes it more likely for individuals to experience disorders associated with trauma (Shiro, 2023). Herman (2015) similarly considers these reactions as a system functioning as a self-protection mechanism for the individual. Because memories of traumatic experiences are not stored in the same way as memories of daily life, it is possible for individuals to exhibit hyperarousal and/or dissociation. Trauma reactions can manifest through emotions, thoughts, and behaviors that indicate these two symptoms. Emotional emptiness, recurring dreams, risky behaviors, and disruptions in social relationships are exemplified as trauma reactions. On the other hand, it has been found that even if the threat perceived by individuals exposed to a traumatic event has passed, the human body continues to perceive the threat biologically. As a result of measurements taken at different times with 227 people who experienced the Elazığ earthquake in 2020, it was determined that the participants' biological stress systems continued to be activated (Yılmaz et al., 2024).

Considering fight, flight and freeze reactions, Humphreys and colleagues (2009) stated that specifically freeze reaction may be a significant risk factor parallel to the effects of instinctive reactions following traumatic events. In parallel with this hypothesis, Koch et al. (2017) aimed to examine automatic defense responses by conducting an experimental study with 340 newly recruited police officers in the experimental group and 85 civilian citizens in the control group. Measurement tools were applied to detect the automatic defense responses and current symptoms of posttraumatic stress disorder (PTSD) levels of the newly assigned police officers before they had any experience in responding to emergencies. The same measurement tools were applied to the control group as well. As a result of evaluations conducted at different times, no significant relationships were found among the specified variables for the control group. However, the police officers' freezing response was found to be significant in terms of showing more intense PTSD symptoms.

2.1.2.2. Cognitive Perspective

From cognitive perspective, Janoff-Bulman (1989) asserts that every individual has certain assumptions that enable them to make sense of life and the world, as well as to define themselves with self-concepts. These assumptions encompass a set of

fundamental beliefs and thought systems that are formed over time from childhood, established through experiences and observations, and are quite difficult to change or add new ones too. In addition, these assumptions are an extension of the schemas that individuals develop as a categorization and meaning-making system to understand life and build self-concept from the moment they are born. Schemas are cognitive structures that are stored in individuals' long-term memories, often determining their roles, ways of thinking, perceiving, and behaving. They serve to process new information and have a guiding function in people's lives (Janoff-Bulman, 1991). The existence and functioning of schemas play an active role in protecting individuals' important needs such as stabilization, predictability, or security, which is why people tend to resist changing or developing their existing schemas (Janoff-Bulman, 2010). The failure to meet these needs through schemas and fundamental assumptions, or situations that create contradictions regarding the existence of these fundamental assumptions, can be perceived as a threat by individuals. At this point, traumatic events include threats to human needs for predictability, sense of control, safety, and stability resulting in disruptions of individuals' core beliefs, assumptions and the perceived world is meaningful (Evces, 2015).

Considering cognitive perspective, Cognitive Processing Model provides comprehensive explanations and reviews on understanding the nature of trauma and trauma responses and includes various therapeutic interventions. This model, while influenced by learning theories, cognitive implications and constructivist perspectives, examines trauma-specific conditioned reactions, the meaning attributed to the experienced event, how these meanings are shaped, and the cognitive processing processes of trauma (Resick & Schnicke, 1993). The model explains how the schemas, assumptions, and core beliefs that individuals learn and develop independently of the traumatic event from early childhood onwards influence the perception of life events with traumatic effects and how trauma reactions develop (Resick et al., 2016). When individuals encounter an event that challenges their established schemas and fundamental beliefs, they may be predisposed to maintain their current views rather than cognitively assimilating and comprehending the event's reality and meaning (Chard et al., 2012). This condition may result in denial of the occurrence, avoidance of the event, or attribution of blame to others or oneself, so becoming integrated into

the individual's self-concept. The disruption of individuals' fundamental beliefs and their subsequent modification due to the event may result in a generalization that includes all schemas. If an individual exhibits negative self-views such as being deficient, insufficient, or incomplete, an event may corroborate these beliefs, so confirming their reliability (Hollon & Garber, 1990). The experience might evolve into a format that justifies the meanings an individual attributes to oneself, resulting in generalization. In some instances, trauma responses show up with greater intensity and overwhelming severity.

Especially in the diagnostic context, feelings of fear and anxiety are frequently included among trauma reactions. However, the cognitive processing model categorizes emotions into natural and manufactured emotions while also emphasizing the presence of different emotions such as guilt, shame, sadness, and disgust. Additionally, for example, the fear experienced during a life-threatening event is considered an adaptive emotion, but it may not play a role that could be the fundamental cause of the trauma reactions observed in individuals later (Resick et al., 2016). This also indicates that the nature of trauma formation is different from the conditioning state, beyond the explanations of existing learning theories. Therefore, it is emphasized that the nature of trauma should be considered along with individuals' beliefs and experiences, without overlooking other emotions.

Upon examining categorized emotions, basic emotions like anger and fear are perceived as adaptive responses typically elicited by challenging events; conversely, guilt is viewed as an emotion that arises post-event, influenced by thought, personal experiences, and core beliefs (Nishith et al., 2005). Regardless of personal characteristics and the subjective nature of trauma, the emotions felt by individuals and cognitive distortions can vary depending on the type of traumatic event experienced. Accordingly, after wars and acts of terrorism, individuals may feel anger, survivor guilt, and fear, while those who have been subjected to sexual assault may feel shame, guilt, and disgust, holding themselves responsible for the incident. Similar to individuals with war experiences, people affected by nature-oriented disasters and accidents may experience shock, helplessness, and guilt related to their survival, and

they may develop cognitive distortions by thinking they could have prevented the event (Resick et al., 2016).

Furthermore, the fight, flight, and freeze reactions analyzed from an evolutionary standpoint have been linked to innate emotions, including anger and fear. These reactions are responses within the brain's functional system that do not engage cognitive processes. When the prefrontal brain operates effectively, individuals' responses to events cease, allowing them to resume everyday activities (Kolk, 2014). However, when the amygdala is overly stimulated, individuals fail to recognize that the threat has disappeared, resulting in the continuation of these reactions. At this point, correlating the emotions felt with the indicators linked to the traumatic event can assist in moderating the hyperactive function of the amygdala. From an evolutionary point of view, the prefrontal cortex's functionality is not fully matured until young adulthood; thus, traumatic events encountered during young adulthood and earlier may exert more profound effects due to people’s restricted processing capabilities. The existence of core beliefs and assumptions may result in a presentation of traumatic symptoms (Resick et al., 2016).

When looking at the relationship among core beliefs, events, and emotions, the inference made, and the emotion produced as a result of a challenging event experienced by a person are closely related to the core beliefs that already existed (Resick & Schnicke, 1993). For example, if a person who has been raped feels guilty about the rape, this feeling may arise from the reinforcement of the traumatic event by the person's previously developed core beliefs. Therefore, it is necessary to meticulously address the individual's core beliefs in the resolution of trauma (Nishith et al., 2005). At this stage, therapeutic interventions belonging to the cognitive processing model should focus on fundamental assumptions such as the world being unfair, people being bad, or bad events being experienced by bad people. The fundamental assumptions here should be examined with the idea that events that cannot be prevented are expected and can happen to anyone, regardless of whether the world or people are good or bad (Resick et al., 2016). When examining the role of world assumptions in the context of nature-oriented disasters during the process of making sense of and processing trauma, measurements have been taken at different

times. As a result, among the survivors of the tsunami disaster, a relationship between changes in world assumptions over time and overall quality of life has been identified. Among the participants, the assumption that the world is not a fair place was associated with low quality of life, while the belief that life is meaningful and that individuals are valuable people was associated with high quality of life. In the longitudinal study conducted, it was found that after the tsunami experience, beliefs that the world is unpredictable and uncontrollable were significantly widespread (Nygaard & Heir, 2012). Bödvarsdóttir and Elklit (2004) examined the relationship between world assumptions and trauma responses among individuals who experienced earthquake disaster. When this relationship was examined in comparison with a control group, it was found that individuals who directly experienced the earthquake felt luckier than those who did not live in the earthquake-affected area. Individuals with high self-worth and a belief that the world is a good place have been reported to have lower trauma symptoms. As a result, an optimistic worldview and self-concept have been identified as protective factors in terms of the intensity of traumatic responses.

In Cognitive Processing Model, which offers an important perspective on how trauma occurs and how its effects should be examined, counseling implications challenge individuals' fundamental assumptions and core beliefs through the traumatic events they have experienced. In this process, by focusing on the role and impact of emotions (adaptive and manufactured emotions), attributions, assumptions, and beliefs are questioned. In this way, the points where individuals get stuck in their cognitive processing after a traumatic event are identified, and support is provided to resolve these points (Chard et al., 2012). Thus, the event itself, the meanings individuals attribute to it, their emotions, and their new perceptions of the world and self are restructured through cognitive interventions. After these processes, individuals' understanding of safety, trust, and power/control is strengthened, and then the theme of self-esteem and intimacy related to self and others is emphasized (Resick et al., 2024).

A cognitive processing theory-based experiment was done on 15 Vietnam War veterans with diagnosed trauma symptoms. Qualitative investigation of the soldiers'

cognitive systems revealed themes including security, trust, power and control, self-esteem, and proximity. While participating, people often felt guilt, fear, and anger. Based on these themes, the 12-session Cognitive Processing Model reduced negative emotions and balanced cognitive distortions (such as blaming statements about perceived event mistakes) with the effect of the war experience and core beliefs (Price et al., 2014). In a similar way, Iverson and the colleagues (2015) conducted an experimental study demonstrating the significant role of the CPT model in the examination and intervention of trauma reactions, was conducted with 98 women who were victims of rape. When examining trauma reactions in women with a history of rape, depression, posttraumatic stress disorder, insecurity, and feelings of guilt were frequently observed, along with distorted, generalized, and adapted thoughts related to guilt. As a result of the interventions and techniques based on the CPT model, a significant reduction in depression and posttraumatic stress disorder symptoms, as well as a balanced improvement in self-blame and feelings of guilt, were observed in the participants.

2.1.2.3. Psychoanalytic Trauma Perspective

Freud, with his studies on hysteria involving women who experienced sexual abuse in childhood, drew attention to the memories and emotions that lead individuals to detach from reality, in other words, dissociation (Breuer et al., 1895). In line with these studies, one of the earliest known definitions of trauma was made by Freud in the 1900s. Freud defines the concept of trauma as events that exceed individuals' mental capacity and therefore have profound effects, making them difficult to comprehend and process. When examining this strain, he often emphasizes the unconscious, because according to the psychodynamic approach, trauma has an effect that difficult to integrate on the event at the conscious level, disrupting the individual's functioning. Therefore, the concepts he used to explain the nature of trauma are those that go beyond and outside the pleasure principle he previously proposed (Freud, 1961). The most fundamental of these concepts is the compulsion to repeat. Individuals repress the traumatic situation unconsciously because they cannot process it at the cognitive level (Wastell, 2005). However, due to the effect of repression, individuals tend to repeat this event through recurring dreams and potentially dangerous behaviors

towards themselves and others. This situation contradicts Freud's pleasure principle, which states that human existence is inclined to avoid pain, stress and seek pleasure. For this reason, he explains trauma as the activation of the death drive, which means the tendency of individuals to annihilate their own existence. The repression that occurs in the unconscious both prevents the resolution of the trauma and makes its traces more permanent, thereby causing bodily and somatic reactions. In addition to repression as a defense mechanism against trauma, individuals can also exhibit projection and denial responses, and they may experience dissociation, which is also used to explain hysteria (Freud, 1961).

While Freud introduced notions important to trauma studies, Herman's approach to trauma markedly diverges from Freud's standpoint. Herman emphasizes the disruptive impact of trauma on people and the consequent loss of their functionality. Her concept of trauma fundamentally emphasizes that individuals' requirements for safety and control are under threat, resulting in a compromised sense of security and diminished control over their lives. Consequently, an individual's relationship with themselves, others, and the world is impaired (Herman, 1992a). In this regard, unlike Freud, Herman also points out the disruptions caused by trauma at the interpersonal and societal level. The detrimental effects of trauma on interpersonal and societal aspects are as profound as the disturbances in an individual's sense of self. Hence, individuals must restore their sense of safety and control to comprehend and reconstruct the traumatic event (Rosenbloom & Williams, 2010). Consequently, in the recovery of trauma, emotional processes are as crucial as cognitive ones. It is essential to reorganize the individual's relationships with their environment and reintegrate them into society, because the shaken perception of security prevents individuals from forming close and trust-based relationships with others (Herman, 2015). From this perspective, when the nature of trauma is addressed in a multifaceted manner and from different dimensions, it is emphasized that the traumatic effects should also be examined on individual, social, and societal levels. Therefore, interventions for individuals with trauma experiences should be inclusive (Levers, 2012).

2.1.2.4. Ecological Systems Models of Trauma

In addition to the long-term, destructive, and challenging dimensions of trauma left on individuals, it can similarly affect the social environment, society, and the functioning of society where the affected individuals are located. Wars, nature-oriented disasters, or terrorist attacks can cause significant loss and destruction in a specific region. Especially in traumatic events that affect large crowds and where all the people in a specific region are exposed, it can become critical to address the effects of trauma from social, communal, and cultural perspectives. At this point, theories and perspectives explaining the effects of trauma on individuals may not clarify the multidimensionality of trauma (Ursano et al., 2003). Bronfenbrenner (1981) emphasizes multi-layered structures with which a person interacts and of which they are a part. The micro-system encompasses the closest environment to which individuals are connected, such as family and friends, and where their need for security is met. The other individuals and formations in this layer constitute the interactions that the person establishes closeness with and frequently engages with. The meso-system is the layer where a person engages in social interactions such as work or school, following the family (Adams et al.,2023). On the other hand, the exo-system consists of dynamics where local and formal organizations that can integrate with the meso-system are found. Examples of the entities within this system include hospitals, facilities, news, and communication channels. The macro-system, when considered in a general context, encompasses the beliefs, traditions, rules, and sets of behaviors that include previous systems and the individual. The chrono-system, on the other hand, is a system that expresses change and continuity as a process. This system encompasses how the events experienced by individuals or events in other systems change over time and the continuity of these systems (Black & Flynn, 2021). When this model is considered, in large-scale disasters affecting the masses, if the impact and severity of the disaster are taken into account, many systems beyond individuals can be negatively affected, and serious disruptions and breakdowns can occur in the interactions within and between these systems. Boon et al. (2012) analyzed Bronfenbrenner's model considering resilience in communities impacted by nature-oriented disasters. This study examines research carried out in Australia following disasters, including floods, bushfires, and hurricanes. Upon reviewing findings, factors requiring analysis for each

ecological dimension were found. The essential components in these dimensions include familial support, inter-institutional communication, access to services such as health education, policies and safety nets, and the monitoring of changes in both the short and long-term following the disaster. It highlighted the vital significance of the roles and effects of these societal structures in relation to social resilience and posttraumatic recovery, rather than focusing on individual resilience.

In the trauma perspective of the ecological model, the event itself, the individuals exposed to the trauma, the relationships between these individuals, and the elements in the broader environments affected by the traumatic event create an ecosystem. Based on these factors, how individuals interpret the traumatic event and cope with it can vary (Harvey, 1996). The existing circumstances and resources of an individual are essential in interpreting trauma and the severity of their responses to a destruction; thus, family and communal networks constitute the social and physical support resources for the individual. Conversely, the efficacy of mass media and facilities offering physical and psychological support after the event is essential for individuals to obtain the required help. Any disruption of these supports adversely influences the detrimental and challenging effects of the trauma (Hoffman & Kruczek, 2011). Yu et al., (2014) analyzed the function of social support following nature-oriented disasters, specifically for subjective support, objective support, and accessibility to support, a similar outcome has been observed in individuals with earthquake experience. Research indicates that survivors who receive social support experienced an elevated quality of life post-earthquake, and the degree of resilience in individuals directly influences their quality of life. The correlation between resilience and quality of life has predominantly been elucidated through the mediating influence of social support. This further elucidates that, alongside individual resilience, the provision of social support significantly enhances quality of life. This research emphasizes the role of governmental institutions and non-governmental organizations in delivering social support. The concerted actions of these entities post-disasters can mitigate its detrimental effects on individuals. Doğulu et al. (2016) examined the post-earthquake experiences of 20 survivors after the 2011 Van earthquake. Accordingly, among the factors that increased resilience after the disaster, participants emphasized the positive effects of the aid provided by the government and non-governmental organizations,

the fulfillment of their basic needs, and the solidarity of family and community. Participants who were able to access social and psychological support resources reported that these had a positive contribution to their own processes.

2.1.3. Responses to Trauma

The responses to a traumatic event are examined extensively before being considered as a problematic or a disorder, aiming to identify distinguishing symptoms from other diagnostic criteria. The reactions and behaviors exhibited by individuals in the early stages following a traumatic event, as they attempt to process and make sense of it, are generally regarded as normal reactions to abnormal situations (Erdur-Baker, 2014; Robinson et al., 2024) and the responses that can be observed emotionally, cognitively and behaviorally are expected to increase and disappear with the effect of time aftermath an event (Fullerton & Ursano, 2005).

After an extremely stressful, challenging and life-threatening event, individuals commonly feel anger, fear, shame, guilt, self-blame, hopelessness and numbness (Robinson et al., 2024). Various studies conducted with different groups that have experienced different traumatic events emphasize the commonality of these emotions, while also highlighting that emotions and the intensity of emotions can vary according to how the traumatic event was encountered, the type of trauma, and many other different variables. For example, in the trauma context, sadness is considered as a result of losses that can be both actual, symbolic or possible (Dalgleish & Power, 2004). Amstadter and Vernon (2008) examined the emotions of anger, shame, guilt, sadness, and fear in individuals experiencing different types of trauma (sexual and physical assault, traffic accident, serious health issue, or injury) in their study, which consisted entirely of women. Accordingly, it was found that individuals who experienced sexual assault felt more anger and shame, the feeling of guilt increased in all groups after the trauma, the feeling of sadness was particularly intense in women who had been sexually and physically assaulted, and the feeling of fear decreased in all groups after the trauma.

Anger and fear are other common emotions that can be shown both during the traumatic event and aftermath of trauma (Amstadter & Vernon, 2008). Specifically,

fear arises in situations that seriously threaten or have the potential to threaten a person's life, body, self-concept, or core beliefs, while anger can occur alongside feelings of frustration or intense disappointment. In addition, in some cases, anger can be observed as a result of suppressing the feeling of fear (Dalgleish & Power, 2004). In the context of nature-oriented disasters, fear is often regarded as a commonly experienced emotion among individuals (Saeed & Gargano, 2022). The emotion of fear has arisen from the apprehension that they and their loved ones may become ensnared beneath the debris during the earthquake, that they will not be rescued, and that they will perish. For instance, analysis of the experiences of persons affected by the February 6th Kahramanmaraş-centered earthquake revealed recurring themes of fear of personal and familial mortality, and anxiety around the loss of their homes and helplessness (Candemir & Tunç, 2024). However, conversely, anger has been linked to the perception of the profound injustice of the destruction they endured, as well as the inequity of the devastation and losses they incurred (Massazza et al., 2020).

In addition to anger and fear, aftermath a trauma, individuals may also exhibit emotional responses such as confusion, anxiety, guilt, shock, and numbness. Additionally, they may experience cognitive reactions such as unwanted and repetitive thoughts, re-experiencing the event (Fullerton & Ursano, 2005). Disruptions in sleeping and eating patterns, difficulty falling asleep, nightmares, increased or decreased appetite, and physical somatic symptoms such as pain or discomfort in various parts of the body may be experienced as physical responses (Levine, 1997; Rosenbloom & Williams, 2010). When examining survivors behavioral or social responses, individuals may display hyperarousal, avoidance, isolation from others, difficulties and conflicts in social and interpersonal relationships, and judgmental or accusatory behaviors (Levine, 1997; Rosenbloom & Williams, 2010; Erdur-Baker, 2014). All the trauma reactions experienced in different dimensions indicate that the effects of trauma can be multidimensional and varied for human beings.

2.1.3.1. Posttraumatic Stress Disorder

Although the specified emotional, cognitive, physical, and behavioral responses are likely, common, and expected following a traumatic event, they can evolve into symptoms of posttraumatic stress disorder that persist for months and years,

negatively impacting individuals' daily routines, mental health, and relationships (Breslau, 2001). Van der Kolk (2000) examines the three dimensions of trauma responses from a diagnostic perspective. The first of these are excessively stressful, repetitive thoughts, dreams, and memories that emerge randomly or under the influence of a trigger related to the traumatic event. On the contrary, individuals may tend to avoid memories, people, places, or all elements related to the traumatic event. This can also be accompanied by emotional numbness and behaviors of isolating oneself from life and people around. On the other hand, individuals tend to suddenly and excessively become aroused. This is easily triggered, accompanied by reminders that individuals are ready to be triggered without elements related to the traumatic event. In addition, these individuals may experience issues such as sleep or anger problems, and attention deficits. In all three cases, individuals struggle to live in the moment and are also dysfunctional in processing the traumatic event (Schiraldi, 2000).

At this point, the term "disorder" is employed for reactions that disrupt and impair daily life routines of individuals exposed to trauma after a certain period (Wastell, 2020). The diagnosis and its related symptoms are based on previously established models, theories, and studies concerning the nature of trauma (Levers, 2012). American Psychiatric Association (APA, 2013), categorizes traumatic symptoms and reactions that last more than one month as diagnosis of posttraumatic stress disorder (PTSD) that includes four main dimensions of symptoms: intrusive and involuntary symptoms (ie., flashbacks, nightmares), persistent avoidance symptoms (i.e., avoiding traumatic event's reminders such as people, places, and objects), negative cognitive and mood alterations (i.e., difficulty in remembering the traumatic event, feeling positive emotions and negative beliefs) and marked alterations (i.e., difficulty in sleeping and concentration, hypervigilance). The symptoms exhibited by individuals following the incident can significantly impair their everyday functioning, and in those displaying evidence of posttraumatic stress disorder, adverse consequences such as risky behaviors, self-harm, suicide ideation, and substance abuse may occur (Wastell, 2005; APA, 2022).

Posttraumatic Stress Disorder may resemble other disorders such as generalized anxiety disorder, panic disorder, and obsessive-compulsive disorder listed in the

DSM-5 due to certain symptoms. Additionally, the individual may have other diagnoses accompanying PTSD. Therefore, the main point that distinguishes PTSD from other diagnoses is that the individual has experienced a shocking and devastating event, and the criteria for what makes an event traumatic are defined in Criterion A (APA, 2022).

Posttraumatic stress disorder is frequently considered in trauma studies to analyze the effects of trauma and traumatic reactions due to its functionality in terms of measurability. In this way, it allows for the examination of trauma reactions in individuals experiencing different types of trauma (i.e. sexual abuse, sudden death, wars, disasters) in relation to trauma-related variables. Smith and colleagues (2016) examined how different trauma experiences and the severity of PTSD symptoms can be experienced among 398 individuals diagnosed with PTSD. According to the research findings, PTSD symptoms were analyzed by categorizing sexual abuse, physical violence, and the sudden death of a loved one. Accordingly, individuals who have experienced sexual abuse and physical violence were found to have more PTSD symptoms compared to those who have lost a loved one.

In addition, posttraumatic stress disorder is a diagnosis that can commonly be encountered in traumatic events affecting large groups of people. Alfuqaha and colleagues (2023) conducted a study with 603 university students who experienced the earthquake that affected Türkiye and Syria on February 6, 2023, and they concluded that severe levels of PTSD symptoms were detected in 26.20% of the participants. In the context of the same earthquake, another research involving 527 survivors who experienced at least one earthquake-related trauma event (such as physical injury or loss of a loved one or family member), it was found that PTSD responses were significantly elevated. Among the participants, it was determined that 54.1% met the criteria for a diagnosis of PTSD (Han Alpay et al., 2024). Both studies are conducted with different survivors experiencing the same earthquake within the first three months after the earthquake. To consider long-term effects of nature-oriented disasters in term of PTSD, in a longitudinal follow-up study examining the lasting effects of PTSD symptoms, conducted two years after the 1998 flood disaster in China, PTSD symptoms were observed in a sample of 200 participants, with the

conclusion that 19.4% of the participants still exhibited PTSD symptoms between 2013 and 2014 (Dai et al., 2016).

2.1.3.2. Posttraumatic Growth: Conceptualization and Models

Research and theories that address the processes individuals experience following traumatic or life-threatening events generally focus on and concentrate on the negative reactions and destructive effects of trauma (Cohen, 1988). However, the main assumption in crises is that genuine growth can occur following negative and challenging experiences (Caplan, 1964). At this point, posttraumatic growth is another trauma reaction that focuses on how people change, transformational and fundamentally and develop new pathways in their lives after extremely stressful and challenging situations or undesirable damaging events regardless of responses and reactions during the event or immediately after the event (Tedeschi et al., 2018). It would be beneficial to analyze how this concept has developed to understand how it is experienced by people with trauma experiences, as well as its function and significance in their lives.

After the traumatic experience, discussions about how devastating and negative the reactions of people and the traumatic experience itself are more involved in the transformative and positive angles of trauma. From this perspective, the concept of posttraumatic growth is addressed in the literature as a relatively more contemporary phenomenon and before the usage of the term other researchers consider the term in different classifications and contexts (Turan, 2024). For instance, Yalom and Lieberman (1991) conducted repeated semi-structured interviews with 36 participants who experienced loss of spouses because of cancer questioned the change in relationships, purpose of life, meaning of life and self-concept with the context of existential awareness and personal growth. Joseph and colleagues (1993) examined both sides of disaster negatively and positively with 35 participants who experienced a ship accident focusing on their responses. The results showed that many of the participants experienced a change in their perspective positively and multidimensionally such as giving more importance to relationships and relatives, being in present moment, increased understanding, wisdom and commitment to life, considering the life as changes and opportunities. Affleck and Tennen (1996) focus

on the term of benefit-reminding that covers seeking for advantages and outcomes, determination of priorities and personal goals, new realities and rebuilding assumptions of self and the world with 35 women's having medical health problems that can be considered as challenging and threatening life experiences. Considering these studies, it is possible to observe the common characteristics of many studies that focus on the transformative effects and positive changes experienced by individuals after traumatic or challenging life events, prior to the concept of posttraumatic growth conceptualized by Tedeschi and Calhoun (1995) and treated as a model.

Models of posttraumatic growth are framed in the literature by categorizing them into eight different models, divided into intentional and unintentional change. Both intentional and unintentional change models have been theoretically conceptualized, but there is a limitation of experimental studies related to some of them (Tedeschi et al., 1998). Models that encompass intentionally change address processes that evolve naturally and evolutionary sometimes increasing and sometimes experiencing stagnation or regression and emphasize the continuity of the process itself. Three models that exemplify this perspective are Resolution and Growth in Grief (Nerken, 1993), Human Change Processes in Psychotherapy (Mahoney, 1982), and Chaos and Growth (Hager, 1992).

While all the change models share common features, unintentional change models focus on transformative changes that are not expected to occur in their natural course, resulting from unforeseen and often sudden and unexpected disruptive events and crisis that affect individuals in multiple dimensions (Tedeschi et al., 1998). In this context, intentional change models include Life Crises and Personal Growth (Schaefer & Moos, 1992), Quantum Change (Miller & C'deBaca, 1994), Resilience and Thriving (O'Leary & Ickovics, 1995), and Transformational Coping (Aldwin, 1994). Considering the scope and focus of this study, the Posttraumatic Growth Model developed primarily by Tedeschi and Calhoun (1995) has been examined in depth while discussing models that observe intentional change.

2.1.3.2.1. Life Crises and Personal Growth

This model focuses on possible positive outcomes of crises and challenging life experiences of individuals that may provide personal growth. The personal growth referenced in this model can be illustrated as an experience that emerges from challenging life events, including divorce, bereavement, unemployment, the death of a loved one, and major health issues or developmental life transitions. The life events portrayed can profoundly and unexpectedly impact individuals' attitudes, basic assumptions, beliefs, or social/close relationships. These impacts can impose strain on individuals; nonetheless, this pressure may lead to a more profound understanding of life. This perspective enables individuals to cultivate a profound comprehension of their own lives and those of others; it significantly contributes to the acquisition of diverse social and personal resources and the development of coping skills for future crises (Schaefer & Moos, 1992). Studies investigating personal growth as a result of the crisis or challenging life events provided as examples have shown that individuals with challenging life experiences develop a more empathetic, collaborative, tolerant of uncertainty, and resilient nature towards others and themselves (Elder, 1974).

Life Crises and Personal Growth Model emphasizes the importance of personal and environmental resources that a person possesses and perceives, while not ignoring the magnitude, scope and severity of traumatic or challenging events (Schaefer & Moos, 1998). In this context, personal and environmental resources refer to the individual's self-efficacy resources, motivation, and resilience prior to events and situations that can be considered life crises, as well as experiences before the event, social support, relationships and interactions. Specifically, all these factors play a crucial role in the phenomenon of personal growth in individuals as individuals exhibit coping or avoidance coping reactions when faced with life crises in relation to these factors. Individuals who perform coping reactions rather than avoidance coping reactions are expected to receive social support concerning the incident, capable of conducting realistic analysis and positive evaluations of the crisis, and exhibit behaviors that signify their willingness to seek help and support when necessary (Moos & Schaefer, 1993). The positive changes and outcomes experienced by individuals undergoing personal growth are addressed in three different dimensions according to this model:

the enhancement of social and individual resources, and the acquisition of new coping skills (Schaefer & Moos, 1992). This model has been examined among participants who experienced Düzce earthquake in 1999, considering individual characteristics, personal experiences related to the earthquake, and social support systems. In addition to individual characteristics, it has been concluded that personal growth occurs in individuals who have suffered physical damage due to the earthquake, lost their homes, incurred economic losses, and lost loved ones. When examining individuals' social support systems and coping strategies in accordance with the structure of the Life Crisis and Personal Growth model, it has been determined that, in addition to their earthquake experiences, problem-focused coping and perceived social support are the most significant factors predicting the model (Şakiroğlu, 2019).

2.1.3.2.2. Quantum Change Model

As intentional change model Quantum Change shows differences from other models focusing on the process of change instead of the outcomes or results. This model assumes that individuals have a certain potential and level of functionality that is called normative level of functioning, and that sudden and destructive situations either decrease or increase a person's level of functionality (O'Leary et al., 1998). In the model known as quantum change, four different mechanisms are observed that contribute to an increase in the normal level of functionality of individuals. Four change mechanisms of quantum change are presented as self-regulation that is a result of process of reorganization and reconstruction of behaviors, perception shift that refers change in perception toward themselves and others, value conflict that emphasize challenging and prioritizing values with the effect of situation that causes to change and the concept of transcendence that is similar with Maslow's self-actualization (1970) emphasize long-lasting, vigorous and unexpected transformations with attribution to external sources (Miller & C'deBaca, 1994).

In this context, the retrospective study addressing the related concepts of quantum change highlights the transformative changes in participants' perceptions of themselves and reality, who have experienced challenging life events. A significant portion of the participants reported experiencing changes in spirituality, priorities, values related to life, and differences in relationships. It has been observed that

individuals experiencing quantum change alter their priorities in life, undergo a parallel process of maturation and self-actualization, prefer to establish meaningful and trust-based relationships compared to before, and gain insight and awareness of the world and their environment instead of focusing solely on themselves (Miller, 2004).

2.1.3.2.3. Resilience and Thriving

Like the Quantum Change Model, the Resilience and Thriving model also emphasizes that individuals have a certain level of potential and functionality (O'Leary et al., 1998). However, unlike the Quantum Change Model, this model presents three possible outcomes that may occur after sudden, unexpected, or shocking events experienced by individuals. One of these possibilities is that individuals perform below their functionality and capacities before the event occurs that is called survival; the second is that they regain their previous levels of functionality refers the term of recovery; and the third is the possibility that they demonstrate functionality in a much greater and new format, different from their previous levels and areas of expertise is called thriving as a reaction to a threat (O'Leary & Ickovics, 1995). Like the emphasis in Schaefer and Moos's (1992) model, the key factor and determination in the likelihood of individuals thriving after a challenging experience here is the resources that individuals possess. These resources can be considered both individual and social resources, and they can be exemplified by activating coping mechanisms, as well as concepts such as optimism, psychological hardiness, cognitive coherence, receiving social support, having economic status and religious beliefs (O'Leary et al., 1998).

This model, referred to as Resilience and Thriving, describes the growth that occurs following challenging life events, mostly characterized as thriving. To theoretically categorize these two concepts and to differentiate them from each other, the variables that serve as predictors for both have been examined. Consoli et al. (2015) investigated hope, spirituality, social support, and cultural values as predictive factors in a study based on self-reports from Latin university students. The results indicated that spirituality and cultural values, which refer to a sense of community, are significant predictors of development, being the key points of differentiation for resilience and thriving.

2.1.3.2.4. Stress-Related Growth and Transformational Coping

Aldwin (1994) suggests that humans inherently possess a homeostatic balance, meaning they have mechanisms that protect their existing structure and system when exposed to external influences. If the external factors that individuals are exposed to are considered as challenging or traumatic life events within this model context, individuals may tend to preserve the existing mechanism, or they may experience a transformational process characterized by both positive and negative aspects. It is possible to find a balance in a transformational process where both positive and negative emotions experienced by individuals are not considered as opposites, but rather as two sets of emotions that encompass each other. In other words, the process of imbalance between the positive and negative emotions experienced by individuals can stabilize and result in growth (O'Leary et al., 1998). When the waves in the functioning of the current mechanism result in transformational growth, it will be possible to see development in emotional regulation skills, taking responsibility for their actions, approaching results-oriented and solution-focused, changes in spiritual values and stronger spirituality, as well as deepening social bonding and meaning-focused connections (Aldwin, 2007).

After extremely stressful events that are perceived as serious threats to a individual, reconstructing one's self-concept nourishes stress-related growth, thereby allowing individuals to build more realistic personal goals and beliefs (McKee & Barber, 1999). According to this model, growth is approached more from a wise perspective. For this reason, wisdom is a phenomenon that is desired to be experienced for stress-related growth. The concept of wisdom is associated with having a realistic and accepting perspective, being aware of one's own capacities and limitations, and being at peace with them, as well as the ability to manage uncertainty in life (Linley, 2003). As in every intentional change model, the characteristics that make experiencing stress-related growth more likely are identified as the personality traits individuals possess like optimism, perceived social support, active coping strategies and skills, and demographic characteristics such as gender, age and socioeconomic status (Aldwin, 2007).

2.1.3.2.5. Posttraumatic Growth as Functional-Descriptive Model

According to the functional descriptive model, the disruption of basic assumptions and beliefs that serve functions such as perceiving the world, forming self-concepts, evaluating events and determining actions previously mentioned as theory of basic assumptions (Janoff-Bulman, 1989) due to traumatic events is a motivating force for posttraumatic growth. The reason for this is that challenging and shocking events allow individuals to reconsider, evaluate, and reorganize their fundamental beliefs about the world and their assumptions about themselves that provide posttraumatic growth (Cann et al., 2010). Valdez and Lilly (2014) addressed posttraumatic growth and the process of reconstructing core assumptions. In this context, they examined the one-year evaluations of women who had been subjected to various forms of physical violence. In the initial assessment, no significant change was detected in the women's core assumptions, while in the final assessment, they concluded that participants who showed positive changes in their core beliefs and assumptions also experienced an increase in their levels of posttraumatic growth.

Challenging and highly stressful life events are metaphorically compared to earthquake waves. Just as the tremors caused by underground faults result in damage to foundational structures and the complete collapse of unsound buildings, after such challenging and life-threatening events, some fundamental assumptions held by individuals may disappear, while others may be harmed. After such an event, following the earthquake, the modification of damaged structures, similar to the construction of new buildings, leads individuals to enter a cognitive process of psychological reconstruction and meaning making regarding the world and themselves (Tedeschi et al., 1998). For this reason, individuals tend to seek logical explanations for the reasons of the events they experience and to make sense of the effects of these events on themselves and their lives (Tedeschi & Calhoun, 2014). When Janoff-Bulman (2004) examines the posttraumatic growth model from the perspective of the world assumptions, he emphasizes that the traumatic experience cannot be explained by the assumptive world understandings that individuals had before the trauma, because of the tendency that people define themselves with their experiences and life-events that they face. After a traumatic experience, individuals

undergo a serious internal upheaval and feel the need to analyze the event, because their existing understanding of the assumptive world is insufficient to explain the event and its effects. However, the inferences made after the event can be reconstructed over time and integrated with assumptive worldviews. The relationship between the outcome drawn from this experience and posttraumatic growth is a new modified assumption that while it is likely that challenging events will occur, one can be more prepared for the destruction caused by the other possible events. Concurrently with Janoff-Bulman's examination, Kawashima and colleagues (2023) investigated the correlation between posttraumatic growth and behaviors exhibited during the COVID-19 pandemic. Consequently, it has been demonstrated that individuals who previously endured the large earthquake in Japan, suffered home damage, and/or experienced a tsunami had markedly higher rates of posttraumatic growth in comparison to other participants. It has been established that these individuals demonstrated more effective, regulated, and proactive actions during the pandemic.

Posttraumatic growth is a concept that includes both the ongoing process and the outcome together because outcome emerges as a result of efforts towards processing, making sense of, coping with, and surviving a serious, challenging, and threatening traumatic event (Tedeschi et al., 2018). That is why the term rumination that is considered to exist among trauma responses and PTSD symptoms is significant for explaining the process aspect of the concept. The role of rumination in the process of individuals seeking reasons for an event and trying to understand and realize the effects of that event is to promote and keep cognitive processing active (Wilson et al., 2014). Typically regarded as a shocking aspect of trauma, intrusive rumination may, on the contrary, be a factor that activates the posttraumatic growth process and facilitates the meaning-making process. On the other hand, intentional rumination, meaning the repetition of thoughts related to an event, may indicate that it is an active part of individuals' posttraumatic growth process as cognitive processing (Henson et al., 2021). The determinative point here is that both types of rumination play an active role as part of cognitive processing, while repetitive thoughts should not be self-blaming, as self-blaming repetitive thoughts hinder the process of posttraumatic growth (Christopher, 2004).

To assert that this transformative process culminates in growth, Tedeschi and Calhoun (1996) emphasize the examination of individuals' three fundamental concepts: “changes in perception of self, interpersonal relationships, and philosophy of life” and they specify these three domains of change as outcomes to examine posttraumatic growth in five different subdimensions: “personal strength, relationship with others, appreciation of life, new possibilities in life, and spiritual change”.

2.1.3.2.5.1. Personal Strength

Following a traumatic event, to observe change in perception of self, it is expected that individuals will define and perceive themselves not as victims but as survivors, reframing their self-assessment from inadequate or helpless to resilient. They are expected to acknowledge their ability to cope with the challenges encountered as a result of the experience, having survived and become self-sufficient individuals (Thomas et al., 1991). It emphasizes the importance of individuals being aware of their own potential, vulnerabilities, mortality and limitations in the dimension of personal strength. Individuals may also uncover new coping abilities and attain heightened awareness, as well as establishing self-objectivity and potential (Janoff-Bulman, 2004). These individuals feel more competent, confident, strong, and sufficient than before, yet they do not hesitate to seek help when they need it or when necessary (Tedeschi et al., 1998).

2.1.3.2.5.2. Relationship with Others

In the context of posttraumatic growth, individuals who experience changes in their interpersonal relationships demonstrate behaviors characterized by a willingness to strengthen existing bonds, openness to both providing and receiving guidance, and the ability to balance how and to what extent they should develop the sense of trust, openness, and intimacy. Disclosing, trusting, and expressing emotions can be acquired skills that can be developed in the aftermath of trauma (Tedeschi & Calhoun, 1996). Building trust or establishing relationships with reliable individuals may be characteristics belonging to this dimension, but depending on the type of traumatic experience encountered, it can develop in a longer-lasting or more challenging manner depending on scope, destructiveness and impact of traumatic event (Tedeschi et al.,

1998). For example, Frazier and Burnett (1994) conducted a study with individuals who have been exposed to rape, only 10% of the participants reported experiencing changes in relationships. On the other hand, Harms and colleagues (2018) stated that posttraumatic growth among individuals who experienced significant losses due to a fire that can be considered as a traumatic event affects a particular community, participants highlighted that they improved their relationships and cooperation with their neighbors.

2.1.3.2.5.3. Appreciation of Life

Individuals who express appreciation of life, such as developing a renewed gratitude for each day without dwelling on the past and reassessing their perception of what truly holds significance in life (Joseph et al., 2012). They are able to develop a greater appreciation for their friends and family members, desire more profound connections with others deriving pleasure from the present moment, tend to feel that the small things in daily life are more meaningful, that simple things which previously held no importance now carry greater significance, and they are inclined to see survival after a traumatic event as an opportunity to appreciate the resources available to them (Tedeschi et al., 2018). Karancı and colleagues (2012) conducted a study with 969 individuals living in Türkiye who have experienced different types of trauma examined whether the dimensions of posttraumatic growth vary depending on the type of trauma. According to the results of the study, there is no significant difference in the dimensions of personal strength, new possibilities, and spiritual change among individuals who have experienced an accident, nature-oriented disasters, or the loss of a loved one. However, it has been found that the appreciation of life score of individuals who have lost a loved one is significantly lower compared to the other two groups. It is posited that participants in the sample who have endured nature-oriented disasters perceive surviving a near-death experience as an opportunity or second chance for the rest of their lives.

2.1.3.2.5.4. New Possibilities in Life

The growth shown in this area can be seen as not only limited to possibilities that always bring about profound changes, but also as an opportunity to acquire a new

hobby, evaluate previously untried activities and plans, and join different groups (Tedeschi et al., 2018). It can be observed that individuals who show growth in the area of new possibilities create new opportunities for themselves and evaluate existing options. Shakespeare-Finch and Barrington (2012) analyze new possibilities in life involving individuals who have experienced various challenging life events (mostly motor accidents, grief, life-threatening health issues), growth in the dimension of new possibilities has been particularly noteworthy. Individuals who have shown growth in this area often report that they have changed their career plans and set new career goals.

2.1.3.2.5.5. Spiritual and Existential Change

At first glance, the area of spiritual and existential change may indicate a strengthening of individuals' beliefs in religious and spiritual matters, but it also emphasizes gaining an existential meaning related to a person's existence in life (Ramos & Leal, 2013). In addition, following an experienced challenging or threatening event, an individual's perspective regarding the meaning attributed to life, the purpose of existence, and the significance of life may undergo significant changes and struggling with trauma can develop sense of spirituality, wisdom and strengthened beliefs (Updegraff & Taylor, 2000). In examining studies focusing on posttraumatic growth, two items related to spiritual and existential change are included in the scale developed by Tedeschi and Calhoun (1996). Subsequently, it became necessary to broaden the items considering cultural issues and Tedeschi and colleagues (2017) developed 4 new items related to subdimension of spiritual-existential change.

Similar to the common emotional, cognitive, and behavioral processes in trauma reactions (Amstadter & Vernon, 2008), variations in dimensions of posttraumatic growth can be distinguished based on the nature of the traumatic experience, the duration since its occurrence, the demographic group, and numerous other factors. Especially considering the unique effects of each nature-oriented disaster, the level of posttraumatic growth and the growth in its subdimensions can vary even if the disaster type is the same. Considering duration, two years after the earthquake in Italy in 2009, the levels of posttraumatic growth were examined in 319 survivors. Accordingly, 18.6% of the participants experienced significant levels of posttraumatic growth, with

the most growth observed in the dimensions of personal strength and appreciation of life among the subdimensions of posttraumatic growth. Additionally, it has been determined that the lowest level of growth among the dimensions is in relationships with others (Bianchini et al., 2017). As a different timing, the levels of posttraumatic growth were examined with 573 people approximately four months after the earthquake that occurred in Türkiye on February 6, 2023. Accordingly, it was determined that the areas of greatest change among the participants in the context of posttraumatic growth were in the dimensions of changes in relationships with others, new possibilities, and personal strength (Şanlı & Kerkez, 2024). However, when evaluated in terms of timing and considering posttraumatic growth as both a process and an outcome, Calhoun and Tedeschi (2000) emphasize that growth following a traumatic experience is unlikely to occur rapidly. Tang (2006) conducted a study six months after the earthquake and tsunami in Thailand in 2004, involving 276 people who experienced various losses due to the disaster, it was found that the prevalence of posttraumatic growth was 34%, while 40% of the participants exhibited psychiatric symptoms. Wu and colleagues (2019) highlighted in their meta-analysis on posttraumatic growth that a substantial degree of posttraumatic growth was observed six months following the traumatic event.

Nguyen (2023) and colleagues emphasized that the limitations arising from the timing of longitudinal studies can be somewhat mitigated in the context of examining the dimensions of posttraumatic growth related to nature-oriented disasters. For instance, the subdimensions of posttraumatic growth were examined at three different times (six months, 12 months, and 42 months after the disaster) among participants who experienced the 2011 Tohoku earthquake and tsunami. Participants were categorized into groups as those who did not experience posttraumatic growth, those who showed misleading signs of posttraumatic growth, and those who showed genuine signs of posttraumatic growth. Over time, the areas of posttraumatic growth experienced by individuals who truly underwent posttraumatic growth were identified. It has been determined that these individuals showed a stable increase in the subdimension of relationships with others, growth in the initial measurements of the new possibilities subdimension, but this rate decreased over time, and there was a slight but stable growth in the dimensions of spiritual change and appreciation of life. The growth

levels of the survivors across the dimensions were found to be most significant and lasting in the dimension of personal strength (M = 12.00 to 12.89, p < .001) in the final evaluation (Kyutoku et al., 2021). In a study conducted six years after the earthquake in Chile in 2010, the frequency of participants showing high levels of posttraumatic growth was 55%, while in the assessment conducted one year later, this prevalence was calculated to be 46.2%. In examining the areas of posttraumatic growth, specifically the domains of personal strength and understanding the value of life have become more pronounced over time (Leiva-Bianchi et al., 2020).

Considering the studies mentioned, in the assessment of posttraumatic growth following nature-oriented disasters, it can be claimed that the most prevalent domain of growth is personal strength, regardless of the research limitations. In general terms, obviously, posttraumatic growth is an essential concept for disaster survivors in order to determine the needs and mental health conditions of individuals who endured nature-oriented disasters and formulate adaptive solutions and appropriate interventions (Amiri et al., 2021). As a theory of posttraumatic growth, other factors and demographic variables need to be examined to highlight the process of posttraumatic growth experiences among survivors of nature-oriented disasters.

2.1.3.3. Factors Influencing Posttraumatic Growth

In the event of a disaster, several variables are identified as vulnerable and risk factors for the mental health of survivors. The severity of the disaster, the level of exposure, and the extent to which it threatens human lives must not be disregarded. Nevertheless, elements like as community with disadvantaged or minority groups, women—particularly those without partners—middle-aged adults, low socioeconomic position, and diagnostic mental health problems can increase vulnerability following a disaster. These individuals may encounter the psychological effects of the event in a more challenging manner (Norris et al., 2002).

After the earthquake that occurred in New Zealand in 2011, which turned into a disaster due to loss of life and property, factors predicting posttraumatic growth were examined with 600 individuals who experienced the earthquake, taking into account demographic characteristics. Accordingly, the levels of posttraumatic growth of

participants who are young individuals and female survivors were found to be significantly related. Researchers have suggested that young women may experience posttraumatic growth due to their greater openness to sharing and social connections than males after highly stressful events (Achterhof et al., 2017). When examining the sociodemographic characteristics predicting posttraumatic growth among participants who experienced Van earthquake in Türkiye in 2011, it was found, in line with the previous study, that having a female gender could be an important characteristic for posttraumatic growth following the earthquake experience (Elçi, 2021). Consistent with the mentioned studies, Smith et al. (2016) found that among the 2001 participants who survived the earthquake, women experienced significantly more posttraumatic growth than men (t (98) = -2.18, p = .03). Specifically, it was concluded that women experienced more growth than men in the areas of appreciation of life, relationships with others, and personal strength.

Additionally, Kabakoğlu and Şahin (2024), conducted a study with 202 participants one year after the earthquake centered in Kahramanmaraş, Turkey, on February 6, 2023, examined the characteristics predicting posttraumatic growth and found that older individuals and women exhibited a higher degree of posttraumatic growth. This phenomenon has been explained by the fact that women are more open to social support and have more life experience due to age, which is consistent with previous research. However, Şakiroğlu (2019), in the study involving survivors of 1999 Düzce earthquake, obtained results that contradicted the findings of previous studies regarding the levels of posttraumatic growth among participants of different ages. The findings indicate that posttraumatic growth is greater in younger individuals than in older age groups. The research findings are supported by the claim that young adults have greater resilience in assimilating transformative experiences.

In addition to sociodemographic variables, post-disaster resources (physical, social, familial, material, and spiritual) and losses related to disaster can significantly influence protective or risk factors. The remaining resources and new conditions after a disaster that affects the masses and causes significant loss of life and property can be crucial for individuals to maintain their standard of living, meet their personal and basic needs, and access existing services (Norris et al., 2002). In addition, in situations

where nature-oriented disasters turn into catastrophes, it is known that individuals who experience significant resource loss struggle more in maintaining their daily lives and rebuilding new resources compared to those with less loss, and this situation creates new stress factors for survivors (Myers & Wee, 2005).

As psychical losses, it was discovered that individuals who underwent amputation due to limb loss exhibited more intense depression, posttraumatic stress disorder, suicidal thoughts, and feelings of guilt compared to individuals who did not experience limb loss as a result of the earthquake that occurred in Türkiye on February 6, 2023. This was discovered when examining the psychological effects on individuals who experienced limb loss and those who did not experience limb loss as a result of the earthquake (Sehlikoğlu & Çiçek, 2024). Sattler et al., (2017) examined the extent to which resource loss affects posttraumatic growth among survivors of the earthquake in Indonesia. As a result of this study, it was found that participants who reported significant resource loss had lower levels of posttraumatic growth and higher levels of depression. As a recent finding, it has been stated that participants in the context of Türkiye, who reported inadequate economic resources and housing conditions following the earthquake on February 6, 2023, had higher levels of traumatic stress (Karataş & Tüccar, 2024). According to the findings of the studies conducted, earthquake-related losses and existing resources may play an important role in the context of posttraumatic growth. For this reason, it will also be important to prioritize access to the services offered for those who survived the earthquake and have suffered significant losses (Myers & Wee, 2005).

The abrupt death of a loved one could be considered a traumatic event. Moreover, during an occurrence such as an earthquake that poses a serious risk to human life, the intensity of difficulty and stress individuals encounter might markedly increase, thereby complicating the prevailing circumstances and conditions. Alongside the traumatic experience, individuals may have a disturbance in social support stemming from an intensive grieving process and their closeness to the deceased (Myers & Wee, 2005). Among survivors who lost their loved ones due to Van earthquake in Türkiye, intense grief reactions regarding their loved ones was observed even 8 years after the

earthquake. Especially, individuals who have lost family members have been found to be at higher risk for intense grief reactions (Şenyüz et al., 2021).

Research has also shown that individuals who can demonstrate posttraumatic growth after a traumatic event are those who have strong social support, are able to effectively regulate their thoughts and emotions, use appropriate coping strategies, and have optimistic and outgoing attitudes (Ezerbolat & Yılmaz-Özpolat, 2016). These qualities allow them to interpret the traumatic event in a manner that can contribute to their posttraumatic growth (Tedeschi et al., 2018). Research into posttraumatic growth following natural catastrophes in the context of different earthquakes indicates that perceived and actual social support plays a crucial role in facilitating the posttraumatic growth experiences and function as a protective factor for destructive effects of trauma (Jia et al., 2017; Guo et al., 2018; Mesidor & Sly, 2019; Shang et al., 2022). As a specifical finding, Garcia and colleagues (2014) conducted a study with survivors of Chile earthquake, the growth in the relationship with others dimension, which is a sub-dimension of posttraumatic growth, was found to be particularly noteworthy among participants who reported receiving significant social support. One of the other findings of the research is that social support (β= .76, p < .001) and positive religious coping (β= .70, p < .001) are the two primary predictors of posttraumatic growth.

As one of the fundamental components measured in posttraumatic growth, spirituality and religion can be considered either as a factor that is damaged/decreased or as a healing/protective factor due to the traumatic event. Although certain life events may significantly affect an individual's spirituality and beliefs, conversely, individuals can effectively incorporate their spiritual dimensions into the process of understanding, processing, and transcending the trauma they have endured (Harper & Pargament, 2015). For the posttraumatic growth model, spirituality plays a highly functional and effective role in the resolution of trauma (Calhoun et al., 2000). In the context of nature-oriented disasters in particular earthquakes, while analyzing posttraumatic growth levels of individuals, spirituality and religion are often examined as a determining factor (Jang & LaMendola, 2007) and considered as an active coping way (Mesidor & Sly, 2019). The significant and supportive influence of spirituality and religion on posttraumatic growth, together with their protective function, must not be

disregarded. In the process of identifying risk variables that may elevate self-harm and suicide ideation among survivors of a nature-oriented disaster, it has also become essential to ascertain protective factors. It has been established that religion can serve as a preventive or mitigating influence against suicidal ideation (Fitzpatrick & Spialek, 2020).

2.2. Unfinished Business

In this part of the study, the concept of unfinished business will be discussed along with other concepts in Gestalt Therapy, and its role and impact in the context of trauma will be addressed.

2.2.1. Nature and Definition of Unfinished Business

Unfinished business, in the context of Gestalt therapy, refers to unresolved issues and negative memories from an individual's prior experiences. Postponed and unexpressed thoughts, feelings, and experiences have transformed into unresolved issues, hence increasing the presence and severity of negative emotions (Sharf, 2012; Voltan-Acar, 2017). Unfinished business does not indicate that the individual is solely living in the past; rather, it signifies that they are stuck in a state of transition between the past and present, causing a noticeable gap. Perls (1969) argues that having difficulties in being in the present moment that is called “here and now” in Gestalt therapy indicates the existence of unfinished business. In addition, Perls and colleagues (2011) assert that self-orientation and self-awareness highly relies on how the individual perceives the world and creates meaning with the effect of prior experiences with the awareness of present moment.

From this perspective, the concept of “here and now” is crucial for both awareness and the resolution of unfinished business pertain to the past; but, due to their unresolved nature, their repercussions extend into the present. As a result of the fact that the establishment of the relationship between the past and the future, as well as the process of differentiation, can only take place through the awareness of the present. There is a connection between the conflicts, regrets, or guilt that are related to unfinished business and the past; yet, because these issues are not resolved, the effects continue to carry over into the present. According to Gestalt therapy, only those who

are aware of the here and now can connect with themselves and their surroundings (Sharf, 2012). For those who are suffering the impacts of unfinished business, it is not very likely that they will be present in and touch with themselves (Voltan-Acar, 2017). Furthermore, because of the pressure that exists between the past and the future, they may experience feelings of anxiety and confusion, which can lead to a decrease in their sense of gratitude and pleasure in life. Gestalt therapy places an emphasis on the fact that the presence of unfinished business is frequently unavoidable; nevertheless, it also takes into consideration the fact that individuals have the ability and potential to overcome these issues (Polster & Polster, 1973).

In addition to the concepts of awareness and "here and now," resistance is an essential component in the process of addressing issues that have not yet been resolved. Within the realm of Gestalt therapy, resistance is regarded as one of the most essential notions. As a result of the fact that, according to Gestalt approach, the presence of resistance is also indicative of the existence of unfinished business (Voltan-Acar, 2015). It is hypothesized that those who are resistant to change are not willing to readily accept it, which in turn impedes their own personal growth and development. Additionally, it is highly improbable that an individual will be conscious of their own feelings and needs, that they will advocate for their own needs, that they will express negative and challenging emotions such as rage or guilt, and that they will be able to keep the integrity of their thoughts, feelings, and behaviors intact in this circumstance (Corey, 2009).

Unfinished business can stem from unmet basic or emotional needs by the person's caregivers or family members, as well as from unmet expectations or unfulfilled promises related to their social circle and friends. Unmet needs can transform into negative emotions and persist; these emotions can also manifest as physical reactions, lead individuals to repetitive thoughts, and cause them to dream about unfinished tasks. Therefore, it is important to address negative emotions and experiences (Taylor, 2014).

2.2.2. Unfinished Business in Bereavement

Unfinished business can be examined in a different setting arises from unexpected or sudden deaths as a result of traumatic occurrences such as disasters, accidents, violence, or abuse that can lead to serious psychological distress. Severe or traumatic experiences have the potential to activate suppressed emotions and result in the appearance of unfinished business (Chambers, 2015). Cohen (2003) examined trauma symptoms through the approach of Gestalt Therapy as unfinished business, because the symptoms can be considered as failed efforts to complete the unfinished aspects of the trauma. Unfinished business has also a crucial and challenging role as a part of bereavement process. Klingspon and colleagues (2015) conducted a study with 224 participants who had experienced loss, found that nearly half of the participants had unfinished business with the deceased. Especially among those who lost a close family member due to sudden and violent causes of death, the presence of unfinished business was found to be significantly higher. It has also been found that these individuals exhibit intense grief symptoms and have difficulty making sense of the loss. The results show that the presence of unfinished business indicates the need to examine the concepts of unfinished business with its dimensions in the case of bereavement process.

The concept of unfinished business in the case of the death of significant others is examined in two dimensions that are unfulfilled wishes and unresolved conflict. Unfulfilled wishes are considered as opportunities and unmet experiences that were imagined and desired to be lived in the relationship between the surviving person and the deceased but were not realized due to death (Cesur-Soysal, 2020). At this point, individuals with unfulfilled wishes in the context of unfinished business experience suffering due to insufficient expressions of love towards the deceased, not having said goodbye to the deceased, and a lack of quality time spent with them during their lifetime. In addition, they experience anxiety that the absence created by the deceased will also be felt in significant future moments (Holland et al., 2018; Neimeyer, 2025). Unrealized experiences are regarded as opportunities and unfulfilled aspirations that were envisioned and yearned for in the relationship between the living individual and the departed yet remained unactualized owing to death (Cesur-Soysal, 2020). People

with unfinished business regarding unresolved conflicts feel overwhelming and negative emotions such as disappointment, guilt, and anger towards the deceased. The survivor may experience pain from secrets divulged about the deceased or from boundary transgressions, as well as profound regret over unforgiven errors committed against the deceased or mistakes made towards them (Holland et al., 2018; Neimeyer, 2025). Holland et al. (2020) highlighted that personal and cultural contexts can also vary, revealing that conflicts experienced while the deceased was alive and the presence of unfinished business after the loss complicates bereavement process.

Neria and Litz (2004) assert that disasters impacting multiple populations and associated losses induce psychological distress in survivors, which encompasses both the stressors associated with the trauma of the disaster and the grieving process linked to traumatic loss. The bereavement processes of individuals who lost their loved ones due to the tsunami that occurred in 2004 were examined one, three, and six years after the disaster. Accordingly, it was determined that women showed more grief reactions than men, that the bereavement process was more challenging for those who experienced the loss of a child, and that the process was prolonged. 11% of the participants reported experiencing intense grief reactions and difficulty accepting the loss even after six years (Sveen et al., 2018) In the context of nature-oriented disasters, individuals witness death of significant others (family members, friends, colleagues, partners), experience sudden and multiple losses and deprivations (home, status, money, physical and mental health) (Ekanayake et al., 2013) that are related to unfinished business as an aspect of traumatic experiences and bereavement process. From this perspective, the multiple losses caused by disasters and the traumatic experience created by their destructive nature, as well as the bereavement process caused by the loss of a loved one due to a disaster, can turn into a more challenging experience due to unfinished business. Greenberg and colleagues (1993) point out that unfinished business pertains to experiences that have not been completed or resolved and have been ongoing or accumulated over a period of time. These partial experiences might arise in the context of close or social relationships with significant others in one's life, such as a spouse, parent, or friend in a negative way. Unresolved issues stem from suppressed emotions, such as disappointment, guilt, and frustration, that have not been addressed or resolved in the past. It is impracticable to address

unresolved, incomplete, or unfulfilled experiences and challenges in relational contexts of real-life experiences upon an individual's death. However, according to Gestalt therapy, unfinished business is the client's responsibility; therefore, they can be addressed within the therapeutic process of psychological counseling (Voltan-Acar, 2020).

Perera-Diltz and colleagues (2012) conducted research with survivors who experienced the tsunami disaster in 2004 and found that half of the participants with direct tsunami experience exhibited significant trauma responses, highlighting the importance of addressing unfinished business interventions aimed at healing trauma for individuals who have experienced disasters. According to Gestalt approach, it is essential to consider the presence of unfinished business to resolve and process traumatic experiences of the clients with specific interventions such as empty-chair technique, role reversal, imaginal dialogs and writing letters to the deceased one (Paivio & Greenberg, 1995; Holland et al., 2018) and rebuilding meaningful connection with body, emotions, and thoughts. Paivio and Greenberg (1995) conducted an experimental study with 34 participants, including those who had experienced loss, divided into two different groups using different methods. Accordingly, it was reported that the participants in the group where Gestalt-based experiential techniques and interventions were applied experienced positive developments in their self-perception and self-acceptance levels, and that 81% of the participants were able to resolve their unfinished tasks. When the effectiveness of the applied techniques and interventions was evaluated four months and one year later, it was observed that the participants maintained their skills related to the gains from the interventions. Field and Horowitz (1998) conducted a long-term study on the unresolved grief process using Gestalt therapy techniques. Accordingly, when the effectiveness of the therapeutic interventions was measured at 6th and 14th months, it was concluded that these interventions were effective in helping individuals make sense of their loss. Additionally, considering the findings, they have suggested investigating the impact of these techniques and practices within the context of unfinished business and how they function in understanding the bereavement process. Specific therapeutic interventions allow clients to realize and resolve the unfinished aspects of the relationship with the deceased person (Holland et al., 2018). Otherwise,

when unexpressed emotions and experiences remain unresolved, the desire to express and resolve them persists. Consequently, individuals may be inclined to cling to familiar patterns when faced with new situations, people, and relationships, as they are unable to fully address or resolve their unfinished business (Copley & Carney, 2020).

2.3. Relationship between Unfinished Business and Posttraumatic Growth in the Context of Disasters

Disasters are events that occur in a specific area and simultaneously affect a group of people, causing devastating consequences from various perspectives and resulting in multiple losses. For this reason, disasters do not only affect individuals on a personal level but also disrupt the functionality of society (Black & Flynn, 2021). Since it disrupts both the functioning mechanisms of individuals and society, the short-term interventions made after a disaster are insufficient in terms of existing resources and coping systems. Generally, when it comes to disasters with a significant destructive impact, multiple losses also cause damage to individuals' social, economic, and mental resources (Ursano et al., 2003). For instance, as a result of a disaster, the potential losses individuals may face simultaneously due to the disaster could include losing a limb, loved ones, their home, economic status, and/or their job.

Disasters can be human-induced or nature-oriented. Human-induced disasters can be exemplified by terrorist attacks, wars, bomb attacks, or chemical attacks. Nature-based disasters can be listed as natural events such as volcanic eruptions, floods, earthquakes, and tornadoes (Ursano et al., 2003; Levers, 2012). The occurrence of natural events can be a crisis for the community, but it does not always turn into a disaster. Factors such as the loss of life and property that turn natural events into disasters, the lack of sufficient resources to prevent them, or minimize the damage are what transform natural events into disasters (Halpern & Tramontin, 2006).

Disasters caused by humans, such as wars and terrorist attacks, are more deliberate, conscious and planned events specifically aimed at causing harm and destruction. Therefore, it is necessary to consider environmental and political factors in these events (Black & Flynn, 2021). In a human-induced disaster, such as a planned terrorist

attack, the responsibility for the destruction and damage is clear, and emotions like blame, anger, and hatred are directed towards those responsible for the incident (Halpern & Vermeulen, 2017). From this point of view, Norris and his colleagues (2002) contend that when taking into account the fact that events involving mass violence are carried out by humans and are intentional, the belief that the world is a just place is more severely shaken, and more destructive effects are caused by human-induced disasters in comparison to nature-oriented disasters. In a similar way, nature-oriented disasters are the widespread form of trauma that has societal repercussions with individual consequences. Consequently, it exerts a broad influence on extensive populations and disrupts societal relations. On the other hand, due to the unplanned and the nature of natural events, there is no specific responsible party. However, individuals may blame themselves for surviving, and they may blame the authorities for the lack of structural measures and the failure to establish adequate health resources. However, compared to human-induced disasters, the feelings of guilt and blame in nature-oriented disasters differ because there is no direct party to hold accountable (Halpern & Vermeulen, 2017). Another significant factor contributing to the destructiveness and trauma of disasters is the inherent unpredictability and inevitability of natural phenomena such as earthquakes, floods, tornadoes, hurricanes and landslides. The point that turns natural events into disasters and is traumatizing is that they have serious consequences for society, leading to loss of life and property. At this point, the incapacity of individuals to implement preventive measures or to evade the impact of an incident exacerbates the intensity of the psychological reactions experienced post-disaster (Ursano et al., 2003; Serim-Yıldız et al., 2024). Chen et al., (2007) examined trauma symptoms in 6412 participants whose homes were destroyed by the earthquake that occurred in Taiwan in 1999. Two years after the earthquake, posttraumatic stress symptoms were detected in 20.9% of the participants.

Earthquakes, in contrast to other natural phenomena, provide a considerably higher risk of disaster due to their unpredictability and the limited preventive measures available. Due to the inability to make clear and definitive forecasts on the timing of an earthquake's occurrence. The strength of rain and wind preceding a flood can serve as a precursor to the tragedy, whereas there are no forewarnings prior to an earthquake. This eventuality complicates individuals' ability to manage possible devastation and

threat, while the persistent aftershocks and likelihood of subsequent earthquakes could hinder precautionary measures (Lazarus, 2002). When certain precautions are not taken at both the individual and societal levels in response to natural occurrences, or when there is neglect related to natural occurrences at the societal level, it becomes difficult to address these occurrences without the influence of humans. As a result, it becomes quite difficult to investigate the effects of natural occurrences in a manner that is completely independent of the effects of disasters caused by humans (Cannon, 1994; Ursano et al., 2003; Erdur-Baker, 2014).

Demir et al. (2024) emphasized in the conclusion of their study that natural events like earthquakes can turn into disasters, and that the human factor plays a significant role in this context. It emphasized that one of the primary reasons for the substantial material and human losses in Kahramanmaraş-centered earthquake on February 6, 2023, was substandard workmanship, the utilization of inadequate and non-durable materials, and construction errors. The vulnerability of settlements and the insufficiency of safeguards implemented by individuals concerning earthquakes result in significant losses during nature-oriented disasters (Halpern & Vermeulen, 2017). Conversely, if the implemented measures (both individually and societally) are adequate, the destruction and losses can be minimized, hence enhancing individuals' ability to cope and fulfill their desire for control (Janoff-Bulman 1989).

In interviews with disaster survivors of Buffalo Creek, the psychological processes experienced by individuals were also referred to as "disaster syndrome." According to this, they stated that even long after the incident, the survivors experience anxiety related to death and exhibit intense anxiety and fear responses when they encounter trigger elements that remind them of the event. Additionally, it has been reported that they feel responsible for the deaths of their deceased relatives, experience deep guilt due to their relatives being deceased and themselves being alive, and do not feel any gratitude for having survived despite the emotional burden created by this guilt, nor do they enjoy life. What most clearly reveals the sense of responsibility and guilt that individuals feel about the incident is that they have recurring dreams. Individuals also experience emotional numbness, emptiness, and isolation as a result of the intense anxiety and guilt they feel, and as a continuation of the shock they experienced during

the event. (Lifton & Olson, 1976). Emotional emptiness and the feeling of psychological numbness are considered a defense mechanism against the guilt felt, while from a psychodynamic perspective, they are interpreted as identification with the deceased person by not showing signs of life (Grauer, 1969). It has also been noted that individuals who survived the disaster are reluctant to carry out daily activities, experience disruptions in their social relationships, and exhibit psychosomatic reactions (Lifton & Olson, 1976).

On the other hand, in a potentially stressful or destructive situation, a person can receive various forms of support from family, friends, or other close ones, fostering a sense of community. However, since many people from the same group experience similar losses and destruction during a disaster, the support resources for individuals will be limited and the lack of social support, the inability to help each other, both damage social relationships and make it difficult for individuals to return to their daily life routines (Halpern & Tramontin, 2006). Additionally, in large-scale disasters, hospitals or educational services are also damaged, leading to serious disruptions in meeting people's basic needs and daily functioning. These disruptions also reduce the effectiveness of short-term interventions. In such situations, the effects of trauma should be addressed not only on an individual level but also in a social and cultural context, because creating a new sense of community and repairing the destruction will require individuals to establish a new order (Halpern & Vermeulen, 2017). Kaniasty (2011) examined the levels of well-being after the trauma with 285 participants living in the same settlement 12, 20, and 28 months after the flood disaster, along with the variables of perceived social support, community cohesion, and interpersonal relationships. Measurements taken at different times have shown that the perceived social support strengthens individuals' ties within the community and their interpersonal relationships. In addition, it has been determined that people who experience withdrawal in interpersonal relationships have lower levels of psychological well-being.

In the model where the responses to the disaster are examined by considering the periods before and after the disaster, social and community reactions are also included. As a pre-disaster phase that is called threat of warning phase, forewarnings and

predictions provided prior to a nature-oriented disaster present individuals the time and opportunity to prepare and minimize possible dangers. This method enables individuals to have enhanced security and a greater sense of control. Individuals who disregard warnings and neglect preparation may encounter profound feelings of regret and remorse when a natural occurrence escalates into a catastrophe. Unlike other phenomena, an earthquake is an unpredictable phenomenon with no specific timing and potential for devastation. Consequently, individuals may experience feelings of vulnerability, dread, and anxiety due to the unforeseen and abrupt nature of the incident (DeWolfe, 2000). Impact phase represents the duration of the disaster as a second stage. The type, magnitude, duration, and impact of the disaster experienced during this time vary in their effects on both individual and societal levels (Myers & Wee, 2005). During this time, individuals may exhibit freezing, fleeing, or fighting responses shown during the incident (Kolk, 2014). In addition to these reactions, people's primary concern is the survival of themselves and their loved ones. One of the most commonly observed reactions during the event is fear, which can be experienced alongside physical reactions such as rapid heartbeat and changes in breathing (DeWolfe, 2000).

The period immediately following the event, known as the heroic phase, involves individuals focusing on survival and taking actions to save themselves and their loved ones. During this period, individuals may release a lot of adrenaline hormones. At the same time, the shock effect is still ongoing. The priority here is the safe evacuation of people and ensuring they receive the necessary medical support. Immediately after the incident, people feel lucky and invincible because they survived. During this period, since the level of physical stimulation is high, individuals may feel energetic but cognitively confused (Myers & Wee, 2005). In the honeymoon phase that follows this period, collective efforts and actions are usually organized, so it is likely to experience feelings themed around solidarity, cooperation, and sharing. Both policymakers, the media, and other stakeholders' primary focus will be on supporting the reconstruction process and resource provision. For this reason, the optimism and hope of those who survived the disaster regarding the repair and recovery process increase (Myers, 1994). After the honeymoon phase, the phase of disappointment begins for those who survived the disaster. At this stage, due to the limited sustainability of the

arrangements promised to be made in the previous stage and the resources provided, people's feelings of optimism and hope disappear (DeWolfe, 2000). Feelings of stress, fear, and anxiety accompany the feeling of disappointment, and instead of the intense energy and adrenaline felt in earlier stages, a sense of fatigue is observed, because sufficient resources are not provided to those who survived the disaster, they begin to experience disruptions in their daily lives and relationships with their surroundings. There are also disruptions in the previously felt sense of community and consciousness of unity (Myers & Wee, 2005).

The duration of the reconstruction phase may vary depending on how the previous phases were experienced. After experiencing the disappointment phase, individuals are aware that they need to take individual steps to organize their own lives. People, while trying to cope with the negative effects of the destructive experience they have gone through, may also be in a process of seeking new meaning in their lives and personal development (Myers, 1994). This process can be prolonged depending on the current conditions and many factors. Individuals could reassess their priorities, operations, and goals related to their own lives. During this process, it is possible to encounter triggers on the anniversary of the disaster or during ceremonies and traditions held after the disaster. However, during the restructuring process, individuals can reassess and review their physical and psychological conditions, increase their support resources, and learn to appreciate themselves and life due to the efforts they show during this process (Myers & Wee, 2005). In the workshops organized for the anniversary of the hurricane disaster, participants' symptoms were examined before the workshop. Accordingly, emotions such as anger, anxiety, tension, and sadness have come to the forefront. In this context, as a result of the workshops, they had the opportunity to share their subjective experiences and commemorate their deceased loved ones in a group consisting of people who had similar experiences. At the same time, the workshops contributed to the development of cooperation and a sense of community among the participants (Nemeth et al., 2012).

Due to the abrupt nature of disaster-related deaths, the resulting losses are intensely felt, regardless of considerations such as physical health, age, and gender. Consequently, in cases of sudden death, individuals are often unprepared for the loss,

resulting in a sense of shock and various unresolved challenging emotions. Particularly in the presence of unsolved issues and conflicts between the surviving and the deceased, individuals are prone to experience a heightened sense of guilt. (Austin & Godleski, 1999).

Gestalt therapy highlights the potential experience of posttraumatic growth following trauma by addressing unfinished business, fostering here and now, cultivating self-awareness, adopting a new perspective, and encouraging individuals to take responsibility for their own lives. This approach also advocates the implementation of practical strategies and intervention plans to facilitate the process of posttraumatic growth (Copley & Carney, 2020). However, exposing traumatic and life-threatening events may affect and determine the way of organizing themselves for survivors, they need to organize themselves to retrieve the need of balance with different ways related to trauma. Individuals who survive traumatic event continue to experience and display survival mechanisms (fight, flight, or freeze) that were instinctively functional during the traumatic event but were insufficient in fully addressing the threat, leaving these responses as unfinished business. Consequently, trauma survivors are inclined to exhibit behaviors corresponding to these reactions in most of the painful or challenging situations in daily life, leading to a repetitive, ruminative but incomplete cycle (Taylor, 2014).

In the context of nature-oriented disasters, the concept of unfinished business is examined as a complicated dimension that can block the process of trauma-resolution. When taken into consideration within the framework of trauma, the indicators of unfinished business in Gestalt treatment led to subtypes that can be observed in the symptoms of posttraumatic stress disorder (PTSD). From the perspective of this school of thinking, one of the primary objectives of finishing unfinished business is to accomplish personal awareness and growth, as well as to resolve any trauma that may have occurred (Sudheer & Dubey, 2021). The presence of unfinished business may be regarded as a mechanism of trauma avoidance that prevents trauma processing, complicates posttraumatic growth, and perpetuates persistent trauma symptoms (Williams, 1988)

CHAPTER 3

3. METHOD

The method section includes research design of the study, demographic characteristics of the sample, the instruments, and data collection procedure and describes data analysis and limitation of the study.

3.1. Research Design

This quantitative study investigates the relationship between posttraumatic growth (PTG) and unfinished business (UB) among individuals who have experienced Kahramanmaraş earthquake disaster on February 6th. Specifically, the study aims to explore how the presence of unfinished business with two dimensions influences posttraumatic growth with five dimensions. Considering the concepts of the study, posttraumatic growth (PTG) and unfinished business (UB) as the set of variables are examined through a multivariate correlational design, conducting Canonical Correlation Analysis (CCA). Correlational research design allows for a relational explanation (Heppner et al., 2008) and is used to investigate the potential relationship between two or more different variables (Fraenkel et al., 2012). Tabachnick and Fidell (2019) assert that CCA is utilized by researchers to investigate the concurrent links between two variable sets, offering it an effective instrument for identifying complicated correlations. It enables the assessment of the strength of the relationship between a linear combination of predictor factors and a linear combination of criterion variables. Additionally, CCA can reveal the extent to which variance in one variable set is explained by the other, providing a more holistic understanding of inter-variable relationships.

3.2. Participants

On 6 February 2023, a 7.1 magnitude earthquake in Kahramanmaraş-based Türkiye directly affected 9.1 million of the approximately 16 million people living in the districts of Kahramanmaraş, Adana, Adyaman, Diyarbakır, Elazığ, Gaziantep, Hatay,

Kilis, Malatya, Osmaniye and Şanlıurfa. A month after the earthquake, it was estimated that about 50,000 people died, 10,000 were injured, and about 200,000 were relocated to other cities. (UNFPA, 2024). Analysis of earthquake-related stress among 2034 individuals affected by the February 6 earthquake in Kahramanmaraş revealed that women, young participants, single individuals, and those with low income had elevated levels of trauma. Analysis of trauma levels in relation to earthquake experiences revealed that participants who were trapped under debris, sustained physical injuries, had injured relatives, lost family members, experienced displacement, and witnessed structural collapses and severe injuries exhibited greater psychological impact and elevated trauma scores (Akçay et al., 2024).

In terms of focus of the study, generalizability and accessibility, the data were collected from the adults who experienced the earthquake disaster in Kahramanmaraş on February 6th. The participation of adults was ensured with snowball sampling. Snowball sampling is frequently conducted on the participants who have specific characteristics determined by the requirements of the study and referral method that the recommendations provided by the first selected participants to other individuals who may be considered to provide criteria (Johnson, 2014). Participation criteria of the study that refers purposive sampling follow as (a) to have been one of the cities Adana, Adıyaman, Diyarbakır, Gaziantep, Hatay, Kahramanmaraş, Kilis, Malatya, Osmaniye, Elazığ and Şanlıurfa during the earthquake disaster in Kahramanmaraş on February 6th 2023, (b) being over 18 years old, (c) having lost a loved one in the earthquake. Demographic characteristics of the 419 participants were presented in Table 1.

Table 1. *Demographic characteristics of the sample*

		f	**%**
Gender	Female	194	**46,3%**
	Male	205	**48,9%**
	Prefer not to disclose	20	**4,8%**
	Total	419	**100,0%**

Age Range	18-24	69	**16,5%**
	25-34	136	**32,5%**
	35-44	99	**23,6%**
	45-54	77	**18,4%**
	55-64	28	**6,7%**
	65+	10	**2,4%**
	Total	419	**100,0%**
Marital Status	Single	112	**26,7%**
	Divorced	48	**11,5%**
	Widowed	17	**4,1%**
	Married	197	**47,0%**
	In a relationship	45	**10,7%**
	Total	419	**100,0%**
Educational Level	Literate	8	**1,9%**
	Primary School	24	**5,7%**
	Middle School	35	**8,4%**
	High School	86	**20,5%**
	University	207	**49,4%**
	Postgraduate	59	**14,1%**
	Total	419	**100,0%**
Earthquake City/Other Cities	Earthquake Cities	325	**77,6%**
	Other Cities	94	**22,4%**
	Total	419	**100,0%**
Type of Residence	House	217	**51,8%**
	Relative's house	56	**13,4%**

Dormitory/Guesthouse	30	**7,2%**
Tent/Containers	98	**23,4%**
Other	18	**4,3%**
Total	419	**100,0%**

The participants of this study consist of a total of 419 individuals, including 194 females (46.3%), 205 males (48.9%), and 20 individuals who did not prefer to specify their gender (4.8%). Demographic characteristics of the sample were demonstrated in Table 1.

16.5% of the participants are between 18-24 years old, 32.5% are between 25-34 years old, 23.6% are between 35-44 years old, 18.4% are between 45-54 years old, 6.7% are between 55-64 years old, and 2.4% are 65 years old or older. Specifically, 32.5% of the participants were aged 25-34, representing the largest proportion of the sample.

The marital status distribution of the participants is as follows: 26.7% of the participants are single, 11.5% are divorced, 4.1% are widowed, 47% are married, and 10.7% are in a relationship.

Considering the educational level of the participants, 1.9% of the participants are literate, 5.7% have completed primary school, 8.4% have completed middle school, 20.5% have completed high school, 49.4% have a university degree, and 14.1% have completed postgraduate education.

Upon examining the participants' residency in the earthquake-affected regions following the February 6, 2023, Kahramanmaraş-centered earthquake, it was found that over fifty percent of the participants (77.6%) continue to reside in the city where they encountered the earthquake. 22.4% of the participants live in a different city outside of the earthquake-affected cities.

The distribution of the types of residences of the participants after the earthquake is 51.8% of the participants are living in houses, 13.4% reside in a relative’s house, 7.2% are staying in dormitories or guesthouses. Notably, 23.4% of individuals are living in temporary accommodation such as tents or containers.

3.4. Instruments

For this study, the data collection process is conducted as follows: Participants read and approved the Informed Consent Form, indicating their voluntary participation in this study through an online platform that is Google Forms. Subsequently, they completed a Demographic Information Form designed to share demographic information. Following this, the data was collected through Unfinished Business in Bereavement Scale-Brief Form and the Posttraumatic Growth Inventory.

3.4.1. Demographic Information Form

Through the Demographic Information Form, participants were asked for the following information: age, gender, education level, the city they were in during and after the earthquake, the type of housing they currently live in, earthquake-related losses and tangible damages, religious belief, whether the participant received psychological and perceived social support after the earthquake experience.

3.4.2. Unfinished Business in Bereavement Scale-Brief Form

The original name of the scale is “The Unfinished Business in Bereavement Scale-Brief Form” was developed by Holland and colleagues from the long version of the scale and consists of eight items using 5-point Likert-type format and according to confirmatory factors analysis the scale has two related factors that are unfulfilled wishes and unresolved conflict. The sample of the study was 460 adults who reported a death of loved one in the past two years. The Cronbach alpha range of the scale is from .90 to .92 and highly correlated (between .95 to .98) with the long format of the scale (Holland et al., 2018). Adaptation to Turkish culture of the scale was developed by Cesur-Soysal in 2020. The sample of the study is 334 adult who have experienced a death of loved one at least six months ago between ages of 18 to 66. The adapted version of the scale consists of 8 items with two subdimensions of unfulfilled wished and unresolved conflict. The subdimension of "unfulfilled wishes" in the scale pertains to the experiences that were possible but did not come to fulfillment or were missed opportunities in the relationship with the deceased one. On the other hand, the subdimension of "unresolved conflicts" signifies the continuing issues with the deceased person or internal conflicts experienced in relation to the loss of the

individual. Calculated Cronbach alpha value is .76 for the subdimension of "unfullfiled wishes" and .62 for "unresolved conflicts". Total scale of Cronbach alpha value calculated as .75 and Spearmen-Brown split-half reliability coefficient analysis is.80. Considering calculated values, the scale is accepted reliable (Soysal, 2020). The Unfinished Business in Bereavement Scale-Brief From is presented in Appendix C.

3.4.3. The Posttraumatic Growth Inventory (PTGI-X)

The Posttraumatic Growth Inventory consists of 21 items and five factors using 6-point Likert type (e.g., I did not experience this change as a result of my crisis, I experienced this change as a result of my crisis) format was developed by Tedeschi and Calhoun in 1996. The five factors are new possibilities, relating to others, personal strength, spiritual change, and appreciation of life. The study was conducted with 604 participants who are adults and experienced different challenging events such as bereavement, accidents, separation of parents, terminated relationship, and criminal victimization. Cronbach alpha coefficient of the scale is .90 that means the scale has good internal consistency (Tedeschi & Calhoun, 1996). In the original format of the scale, spiritual change as a subdomain is assessed with two items. With the focus on strengthening the scale psychometrically, Tedeschi and colleagues (2017) developed four new items related to subdimension of spiritual-existential change. Expanded version of the scale was analyzed with the studies conducted in different cultures including the Unites States, Türkiye and Japan. The research on the sample from Türkiye for the PTGI-X scale was conducted by Şenol-Durak as part of the study conducted in three different countries. For Turkish sample of the study, 502 university students who reported experiencing several traumatic events in past 6 months. Internal reliability of the scale was calculated .96. The scoring of this scale is calculated to be between 0 and 125 points, with 125 representing the highest score achievable from the scale, while 0 represents the lowest score achievable (Tedeschi et al., 2017).

3.5. Procedure

After obtaining approval from the TED University Human Research Ethics Committee, the participants who engaged in the study using snowball sampling were contacted individually with field visits to settlements and container fields in

earthquake areas. During face-to-face contacts, the importance, objectives, and impact of the study were explained to participants as needed. It was discussed whether they would like to participate in the study if they knew other individuals who met the study criteria. Throughout these discussions, it is emphasized that participation in the study is entirely based on voluntary consent. Participation in a survey generated through Google Forms is allowed if consent is obtained. Considering the ethical principle of non-maleficence, the final phase of the research includes the Posttraumatic Growth Inventory, which monitors the contents of the items in the inventories applied to participants and leads them to reflect on the transformative and positive changes they experience after the trauma. Upon completion of the research, the "Post-Disaster Self-Help Guide" was disseminated to the participants through internet platforms at their request. The duration of completing research inventories is nearly 15 minutes.

3.5. Data Analysis Procedure

As a first step of data analysis, missing values were detected and before the main analysis, univariate and multivariate outliers were screened, and relevant assumptions for Confirmatory Factor Analysis (CFA) and Canonical Correlation Analysis (CCA) were tested. According to Mahalanobis distance values, three outliers in the CCA dataset were excluded and the main analysis conducted with 419 participants. Data from 250 participants were included in the analysis, and the validity of the Posttraumatic Growth Inventory and the Unfinished Business in Bereavement Scale–Brief Form was examined. In addition, the reliability of both scales was evaluated using Cronbach's alpha, calculated separately for the total scores and each subdimension. Descriptive statistics of the sample and the variables were employed. For the examination of the main research question that focuses on relationship between posttraumatic growth and unfinished business among survivors, a canonical correlation analysis was conducted considering these two variables as sets of variables separately. The set of variables of these two constructs were defined and examined based on the subdimensions of the scales as follows: for posttraumatic growth—relationship with others, personal strength, appreciation of life, new possibilities, and spiritual and existential change; and for unfinished business—unfulfilled wishes and

unresolved conflicts. All stages of the analysis were conducted using the R programming language (2023.06.0).

3.6. Limitations of the Study

This study points to significant findings regarding the posttraumatic growth processes of individuals with earthquake experience, but it also has limitations that need to be considered. In this study, a correlational design was constructed, and canonical analysis was applied. Therefore, causal relationships cannot be established between posttraumatic growth and unfinished business included in the study, and between their sub-dimensions. On the other hand, the data were collected over a specific time period (November 2024-January 2025), so these variables and their relationships could not be examined in a time-based manner. Therefore, it is not possible to observe a temporal change. The participants consist solely of adults who were directly affected by Kahramanmaraş-centered earthquake on February 6, 2023, and lost a relative. The results of the research are limited to Türkiye and the earthquake experience and cannot be generalized to different cultures and types of disasters. The scale items directed at the participants include responses based on their self-reports. For this reason, the tendency for social acceptance may have influenced the participants' responses.

CHAPTER 4

4. RESULTS

In this section, the relationship between posttraumatic growth and unfinished business was statistically analyzed in line with the aim of the study. In the first stage of the analysis, validity and reliability tests were conducted for the variable sets. In the second stage, in accordance with the research question, the five subdimensions of posttraumatic growth were examined as one variable set, while the two subdimensions of unfinished business were examined as a separate variable set. This examination was carried out using canonical correlation analysis. The analyses are presented step by step along with their results.

4.1. Data Screening and Assumption Checks

Prior to conducting data analysis, the assumptions required for confirmatory factor analysis (CFA) and canonical correlation analysis (CCA) were thoroughly examined. For CFA, a dataset of 250 individuals was examined, while for CCA, a dataset of 422 individuals was assessed. The dataset was imported into R (2023.06.0), and the assumptions were evaluated using the "*assumptions*" function developed by Kılıç (2020), which facilitates the testing of several statistical assumptions. This function was utilized to check for missing data, univariate and multivariate outliers, multicollinearity, and both univariate and multivariate normality. Additionally, the *psych* package (Revelle, 2023) was employed to assess singularity and the suitability of the correlation matrix for factor analysis.

One of the assumptions tested was the absence of missing data. The datasets consisted of 250 individuals for CFA and 422 individuals for CCA, with no missing data identified. Another assumption that needed to be checked before proceeding with the analyses was the presence of univariate and multivariate outliers. Outliers can significantly distort the relationships among variables, making it essential to detect and address these cases either by applying necessary corrections or removing them from the datasets. Univariate outliers were examined by converting participants' total

scale scores into *z*-scores, with scores beyond the range of -3 to +3 considered as potential outliers (Mertler & Vandatta, 2005). The results indicated no univariate outliers for CFA and CCA datasets. To identify multivariate outliers, Mahalanobis distance values were computed (Bandalos & Finney, 2019; Kline, 2005). For the CFA analysis of the UB dataset, the degrees of freedom (df) were set to 2, and the significance level was determined as .001. The corresponding critical chi-square (χ^2) value for this configuration was 13.815, and no participants had Mahalanobis distance values exceeding this threshold. For the CFA analysis of the PTG dataset, the *df* were set to 5, and the significance level was determined as p=.001. The corresponding critical χ^2 value for this configuration was 20.517, and no participants had Mahalanobis distance values exceeding this threshold. For the CCA, the *df* for all variables was set to 7, and the significance level was determined as p = .001. The corresponding critical χ^2 value for this configuration was 24.322. Using this value as a reference point, three participants with Mahalanobis distance values exceeding 24.322 were excluded from the CCA dataset, resulting in a final sample size of 419.

Another critical assumption assessed was the absence of multicollinearity among the variables within each set (Tabachnick & Fidell, 2007). To evaluate this assumption, tolerance values, variance inflation factors (VIF), and condition indices (CI) were analyzed. According to the established guidelines, the absence of multicollinearity requires tolerance values greater than .01, VIF values below 10, and condition indices less than 30 (Kline, 2011; Tabachnick & Fidell, 2019). The results of these multicollinearity tests are presented separately for CFA and CCA in Table 2.

Table 2. *Results of multicollinearity*

Variable	**Tolerance**	**VIF**	**Condition Index (CI)**
CFA Dataset			
UB_UW	.781	1.28	5.673
UB_UC	.781	1.28	8.639
PTG_SEC	.601	1.66	8.024

PTG_AL	.556	1.80	8.863
PTG_PS	.462	2.17	9.441
PTG_NP	.427	2.34	11.670
PTG_RO	.618	1.62	12.294
CCA Dataset			
UB_UW	.714	1.40	5.823
UB_UC	.602	1.66	9.145
PTG_SEC	.523	1.91	11.709
PTG_AL	.493	2.03	12.423
PTG_PS	.350	2.86	14.022
PTG_NP	.318	3.15	14.898
PTG_RO	.528	1.89	17.237

Upon reviewing Table 2 in accordance with the relevant threshold values, it was determined that there were no multicollinearity issues in any of the scales or subscales within the CFA and CCA datasets.

Another assumption pertains to the absence of singularity among the variables. Singularity arises when the relationships between variables are excessively high (e.g., .90 or above), which can adversely affect the results of the analysis (Mertler & Vannatta, 2005; Tabachnick & Fidell, 2019). To address this, the correlations among the variables were examined for CFA and CCA samples. The results showed that no pairs of variables exhibited correlations of .90 or above, indicating the absence of singularity among the variables.

4.1.1. Descriptive Statistics for Variables

The assumptions of univariate and multivariate normality were examined for each variable of each dataset. Univariate normality was assessed by inspecting skewness and kurtosis values, while multivariate normality was evaluated using Mardia's coefficients of skewness and kurtosis (Mardia, 1970). The mean, standard deviation,

skewness, and kurtosis values for the CFA and CCA samples are presented in Table 3.

Table 3. *Descriptive statistics for CFA and CCA datasets*

Variable	n	Mean	SD	Skewness/ Kurtosis
CFA Dataset				
UB_UW	250	13.33	3.90	-.184 / -.325
UB_UC	250	10.12	4.43	.226 / -.956
UB Total	250	23.46	7.15	-.095 / -.307
PTG_SEC	250	15.95	6.16	.097 / -.229
PTG_AL	250	9.08	3.20	-.132 / -.385
PTG_PS	250	11.80	4.47	.024 / -.818
PTG_NP	250	12.95	4.99	.178 / -.150
PTG_RO	250	17.06	6.38	.243 / .097
PTG Total	250	66.86	19.77	.291 / .043
CCA Dataset				
UB_UW	419	3.44	.99	-.317 / -.329
UB_UC	419	2.66	1.17	.222 / -1.013
UB Total	419	6.10	1.86	-.118 / -.381
PTG_SEC	419	2.77	1.04	.043 / -.344
PTG_AL	419	3.08	1.09	-.252 / -.395
PTG_PS	419	3.06	1.10	-.069 / -.789
PTG_NP	419	2.73	1.01	.151 / -.391
PTG_RO	419	2.54	.957	.138 / -.073
PTG Total	419	14.20	4.25	.157 / -.274

As shown in Table 3, the final dataset consisted of 250 individuals for CFA and 419 individuals for CCA. All scales and subscales exhibited skewness and kurtosis values within the range of -1.5 to +1.5, as suggested by Tabachnick and Fidell (2013), indicating that univariate normality was satisfied. For multivariate normality, Mardia's (1970) coefficients of skewness and kurtosis were examined, and the results indicated $p > .05$, suggesting that the assumption of multivariate normality was also met for CFA and CCA datasets.

In addition to these assumptions, the Bartlett test results were analyzed to evaluate the suitability of the correlation matrix for CFA. The results demonstrated statistical significance ($p < .05$) for all subdimensions and whole scales, confirming that the assumption of multivariate normality was satisfied.

4.2. Confirmatory Factor Analysis

After verifying all assumptions, CFA was conducted to evaluate the validity of the scales. The CFA analyses were performed using the *lavaan* (Rosseel, 2012) and *semPlot* (Epskamp, 2022) packages in the R environment. The evaluation of CFA results included the examination of χ^2, *df*, χ^2/df ratio, comparative fit index (CFI), Tucker-Lewis Index (TLI), standardized root mean square residual (SRMR), and root mean square error of approximation (RMSEA). The recommended cut-off criteria for these indices are as follows: $1 < \chi^2/df < 3$ (Carmines & McIver, 1983; Kline, 2015); $CFI \geq .90$ (Brown, 2015; Lai & Green, 2016); $TLI \geq 0.90$ (Bentler & Bonett, 1980; Tucker & Lewis, 1973); $SRMR < 0.10$ (Schermelleh-Engel et al., 2003). RMSEA, although theoretically unbounded, is typically expected to be below 1.00 (Matsueda, 2012). In addition to fit indices, the path diagram and factor loadings of the scale structure were also examined. For factor loadings, a minimum threshold of .32, as suggested by Tabachnick and Fidell (2019), was adopted.

Before interpreting the CFA results, it is important to note the following regarding the cut-off criteria: many CFA studies refer to the cut-off values suggested by Hu and Bentler (1999). However, upon closer examination, these criteria are specifically applicable to models with a maximum likelihood (ML) estimation method, three factors with five items per factor, and high factor loadings (.70–.80). Therefore, it

should be acknowledged that these cut-off points are not universally fixed for all types of data (Kılıç, 2020).

4.2.1. Confirmatory Factor Analysis of Unfinished Business in Bereavement Scale (UB)

The UB variable consists of two factors, unfulfilled wishes UB_UW and unresolved conflict UB_UC. Both subscale and total scale score can be calculated from the scale to conduct analyses (Cesur-Soysal, 2020). The CFA results for UB are presented in Table 4 and Figure 1.

Table 4. *Goodness-of-fit analysis results for the two-factor model*

χ^2	df	χ^2/df	CFI	TLI	SRMR	RMSEA
34.67*	19	1.82	.94	.92	.05	.07

Note. χ^2 = chi-square; *df* = degrees of freedom; *CFI* = Comparative Fit Index; *TLI* = Tucker–Lewis Index; *SRMR* = Standardized Root Mean Square Residual; *RMSEA* = Root Mean Square Error of Approximation. $p < .05$.

The chi-square value ($\chi^2 = 34.665$, $df = 19$, $p < .05$) and the χ^2/df ratio (1.82) indicate that the model demonstrates an acceptable fit. Additionally, the *CFI*, *TLI*, *SRMR*, and *RMSEA* values suggest that the model exhibits a good fit when evaluated against the recommended thresholds. The factor model and standardized factor loadings for the UB scale are illustrated in Figure 1.

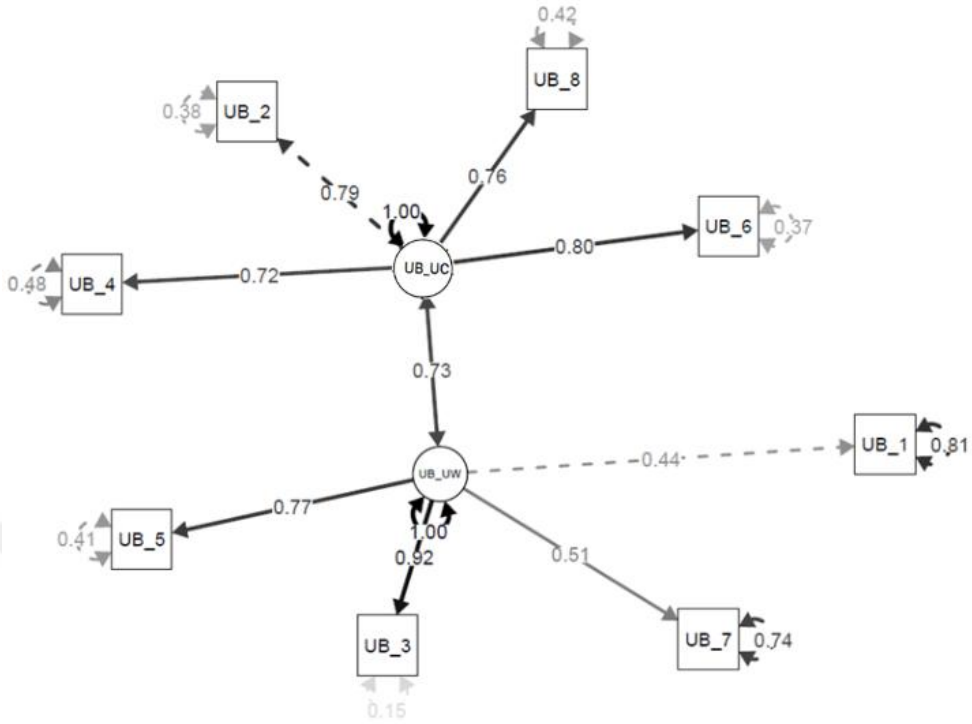

Figure 1. Path diagram for the Unfinished Business in Bereavement Scale.

The path diagram for the UB scale confirms the two-factor structure. Examination of the factor loadings reveal values ranging from .44 to .92. Given the minimum threshold of .32 suggested by Tabachnick and Fidell (2019), all items loaded onto their expected factors within the acceptable range. Consequently, the structure of the Unfinished Business in Bereavement Scale is confirmed for the sample in this study.

4.2.2. Confirmatory Factor Analysis of Posttraumatic Growth Inventory (PTGI-X)

The PTG variable consists of five factors: PTG_SEC for spiritual and existential change, PTG_AL for appreciation of life, PTG_PS for personal strength, PTG_NP for new possibilities, and PTG_RO for relationship with others. Analyses were conducted using both subscale scores and the total score for the entire scale (Tedeschi et al., 2017). The results of the CFA for PTG are presented in Table 5 and Figure 2.

Table 5. *Goodness-of-fit analysis results for the five-factor model*

χ^2	df	χ^2/df	CFI	TLI	SRMR	RMSEA
777.385*	265	2.93	.96	.95	.08	.08

Note. χ^2 = chi-square; df = degrees of freedom; CFI = Comparative Fit Index; TLI = Tucker–Lewis Index; SRMR = Standardized Root Mean Square Residual; RMSEA = Root Mean Square Error of Approximation. $p < .05$.

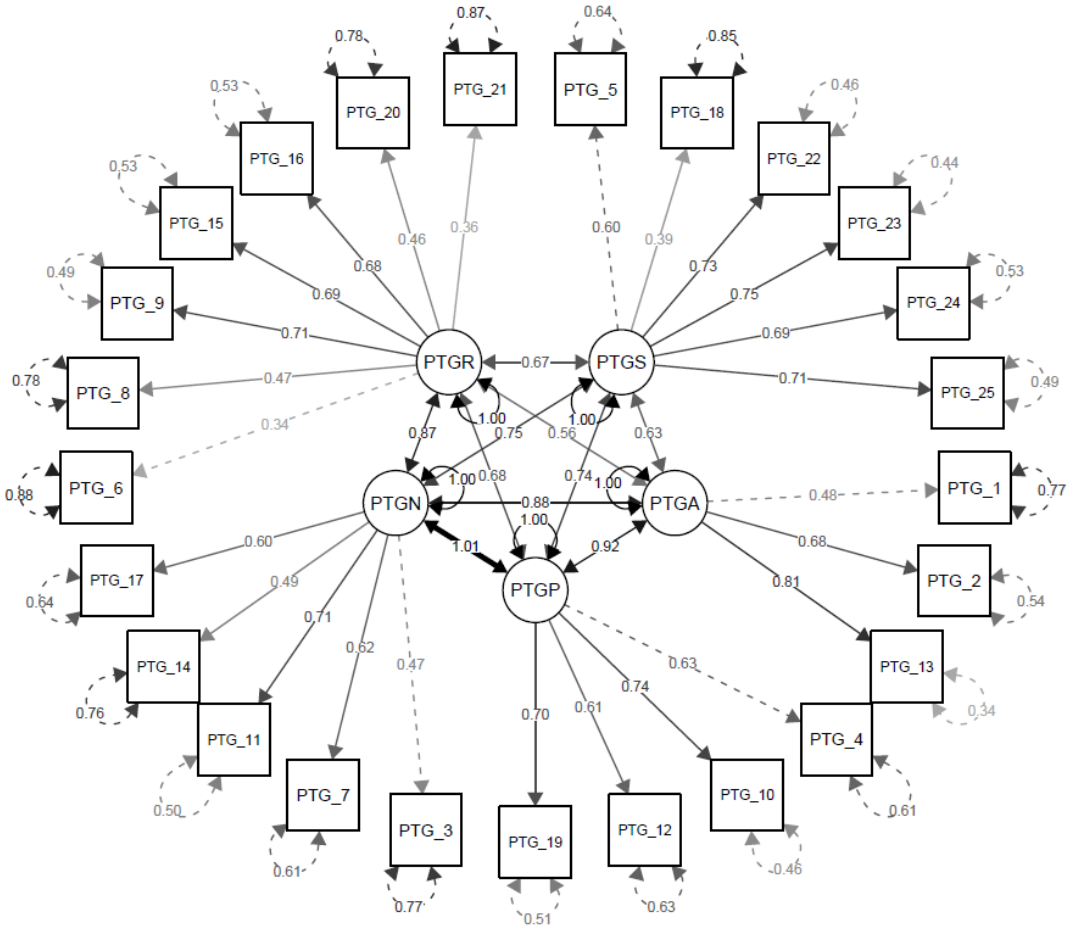

Figure 2. Diagram for the Posttraumatic Growth Inventory (PTGI-X).

An examination of the path diagram confirms the five-factor structure. The factor loadings of the items range from .34 to .81. Given that the minimum acceptable threshold for factor loadings is .32 (Tabachnick & Fidell, 2019), all items load onto

their respective factors within acceptable limits. Consequently, the structure of the PTGI-X is confirmed for the sample in this study.

4.3. Reliability Analysis

Following the validity analyses, the reliability of the scales was assessed using Cronbach's alpha for 419 participants (Cronbach, 1971). The *psych* package in R (Revelle, 2023) was employed to compute the reliability coefficients and illustrated in Table 6.

Table 6. *Cronbach's alpha values for all scales and subscales*

Scale	**Cronbach's alpha**
UB_UW	.72
UB_UC	.80
UB Total	.81
PTG_SEC	.77
PTG_AL	.67
PTG_PS	.72
PTG_NP	.70
PTG_RO	.74
PTG Total	.90

The Cronbach's alpha values in Table 6 range between .67 and .90 for all scales and subscales. A Cronbach's alpha of .70 or higher is generally recommended (Adelson et al., 2019; Kline, 2000). The PTG_AL subscale falls slightly below this threshold. However, DeVellis (2017) suggests that a reliability coefficient between 0.65 and 0.70 is acceptable. Thus, the reliability coefficients can be considered adequate.

All assumptions related to the scales were tested, followed by validity and reliability analyses. The results confirm that the scales effectively measure UB and PTG for the participants of this study. Consequently, the dataset is deemed suitable for CCA. CCA is a multivariate statistical technique that identifies and measures the relationships

between two sets of variables (Tabachnick & Fidell, 2019). According to Tabachnick and Fidell (2019), CCA is used when researchers aim to examine the simultaneous relationships between two sets of variables, making it a powerful tool for uncovering complex associations. It allows for the determination of how strongly a linear combination of predictor variables relates to a linear combination of criterion variables. Additionally, CCA can reveal the extent to which variance in one variable set is explained by the other, providing a more holistic understanding of inter-variable relationships. The *CCP* package in R (Menzel, 2022) was used for this analysis.

4.4. Canonical Correlation Analysis

4.4.1. Significance of Canonical Correlation

In the CCA, SET 1 represents UB, comprising two variables: UB_UW and UB_UC. SET 2 represents PTG and consists of five variables: PTG_SEC, PTG_AL, PTG_PS, PTG_NP, and PTG_RO. The statistical significance of canonical correlations was assessed using Wilks' lambda. Wilks' lambda is a general test that simultaneously examines all canonical correlation coefficients. The results of the analysis are presented in Table 7.

Table 7. *Canonical correlations*

	Canonical Correlation	**Eigenvalue**	**Wilks' Lambda**	**F**	**df1**	**df2**	**Sig.**
SET 1	0.474	0.300	0.732	13.909	10	822	.000
SET 2	0.237	0.059	0.944	6.112	4	412	.000

Note. Sig. values less than $p < .05$ indicate statistical significance.

As shown in Table 7, the first canonical function indicates a statistically significant relationship between UB and PTG (Wilks' lambda = .732, $F(10, 822) = 13.909$, $p < .05$). Similarly, the second canonical function also reveals a significant relationship (Wilks' lambda = .944, $F(4, 412) = 6.112$, $p < .05$). The first canonical function has a correlation of 0.474, indicating a moderate relationship, explaining 30% of the shared variance. The second canonical function has a lower correlation of .237, with the variables sharing approximately 6% of the variance. Since canonical correlations

below .30 and shared variances under 10% are not considered meaningful for interpretation (Tabachnick & Fidell, 2019), further analysis focuses only on the first canonical correlation.

4.4.2. Standardized Canonical Loadings

After testing the significance of canonical correlations, standardized canonical loadings were interpreted. Standardized canonical coefficients indicate the standard weights of each variable in defining the canonical variables. These coefficients can be interpreted similarly to regression coefficients and express the direct contribution of each independent or dependent variable to the respective canonical variable. In other words, these coefficients represent the weights of the variables on the canonical variable. Using standardized canonical coefficients, the canonical function is formulated. The larger the coefficient, the greater the contribution of the variable to the canonical function. The sign of the coefficient indicates the direction of the relationship (Hair et al., 2019; Tabachnick & Fidell, 2019). The standardized canonical loadings are provided in Table 8.

Table 8. *Standardized canonical loadings*

Variable	**Standardized Canonical Loadings**
SET 1	
UB_UW	-.013
UB_UC	.053
PTG_SEC	.007
SET 2	
PTG_AL	-.016
PTG_PS	-.050
PTG_NP	.030
PTG_RO	.035

Based on Table 8, the first canonical function for SET 1 and SET 2 is formulated as follows:

$$SET1 = -0.013\ UB_UW + 0.053\ UB_UC$$

$$SET2 = 0.007\ PTG_SEC - 0.016\ PTG_AL - 0.050\ PTG_PS + 0.030\ PTG_NP + 0.035\ PTG_RO$$

For SET 1, UB_UC (0.053) is the dominant variable contributing the most positively to the first canonical variable. UB_UW (-0.013) has a minimal negative contribution. For SET 2, PTG_PS (-0.050) contributes the most and has a negative relationship with the first canonical variable. PTG_SEC (0.007) has the lowest positive contribution. These findings indicate that the first canonical function is strongly represented by UB_UC and PTG_PS, whereas UB_UW and PTG_SEC have the least impact.

4.4.3. Canonical Loadings, Structure and Cross Loadings

Table 9 presents the values for canonical loadings, structure coefficients, and cross loadings. Canonical loading represents the correlation between each variable and the canonical variable. These values indicate how well a variable represents the structure of the canonical variable. They are used to understand the conceptual structure of the canonical variable and to determine which variables best represent it (Tabachnick & Fidell, 2019). Similar to factor loadings, they show the extent to which an observed variable contributes to a latent variable (Temurtaş, 2016). Additionally, by squaring the canonical loading coefficients, we obtain the amount of variation in the original variable values, which are referred to as structure coefficients. The structure coefficient is also known as the canonical root or eigenvalue. It is conceptually equivalent to R^2 in multiple regression, representing the shared variance between dependent and independent variables. Unlike canonical loadings, structure coefficients only indicate within-group relationships (Akour et al., 2023; Hair et al., 2019; Tabachnick & Fidell, 2019). Cross loading, on the other hand, refers to the correlation of a variable with the canonical variable from the opposite set (Dillon & Goldstein, 1984; Tabachnick & Fidell, 2019).

Table 9. *Canonical loadings, structure coefficients and cross loadings*

Set	Variable	Canonical Loadings	Structure Coefficient (Eigenvalue–Rc^2)	Cross Loadings
SET 1	UB_UW	0.209	4.36%	0.098
	UB_UC	0.967	93.00%	0.237
	PTG_SEC	0.184	3.40%	0.086
	PTG_AL	-0.247	6.13%	-0.060
SET 2	PTG_PS	-0.349	12.11%	-0.163
	PTG_NP	0.210	4.45%	0.051
	PTG_RO	0.548	30.10%	0.256

When examining the canonical loadings values for the first canonical function in Table 9, it is observed that the contribution of the two variables in SET 1 to the canonical variable differs. UB_UC (0.967) makes the most significant contribution to the first canonical function, indicating that this variable plays a crucial role in defining the first canonical variable. Although UB_UW (0.209) has a weaker relationship with the first canonical variable, it still provides a meaningful contribution. In SET 2, PTG_RO (0.548) has the highest contribution to the first canonical function, suggesting that PTG_RO is the best representative of the first canonical variable. This is followed by PTG_PS (-0.349) and PTG_AL (-0.247). The negative loadings indicate that these variables have an inverse relationship with the canonical function. The negative loadings of PTG_PS and PTG_AL imply that an increase in these variables would lead to a decrease in the value of the first canonical function. The variables with the lowest contributions to the first canonical function in SET 2 are PTG_NP (0.210) and PTG_SEC (0.184).

For structure coefficients in the first canonical function, UB_UC in SET 1 has the highest structure coefficient (93.00%), confirming that it substantially represents the

first canonical function. In contrast, UB_UW contributes only 4.36%, highlighting its limited effect on the first canonical function. In SET 2, PTG_RO (30.10%) makes the highest contribution. PTG_SEC (3.40%) and PTG

_NP (4.45%) have lower structure coefficients, indicating that they weakly represent the first canonical function.

Regarding cross loadings for the first canonical function, UB_UC (0.237) from SET 1 has a moderate positive correlation with the first canonical variable in SET 2. In contrast, UB_UW (0.098) has a weak positive relationship with the first canonical variable in SET 2, indicating a limited effect. In SET 2, PTG_RO (0.256) has a significant positive correlation with the first canonical variable in SET 1. However, PTG_PS (-0.163) and PTG_AL (-0.060) have negative cross loadings with the first canonical function in SET 1, demonstrating that these variables have an inverse relationship with the first canonical variable in SET 1.

4.4.4. Redundancy Analysis

Following these findings, redundancy indices for the two variable sets were calculated and are presented in Table 10.

Table 10. *Redundancy analysis*

	Set 1 by Self	**Set 1 by Set 2**	**Set 2 by Self**	**Set 2 by Set 1**
Redundancy Index	0.490	0.021	0.112	0.033

When examining the redundancy indices of the first canonical function, it is observed that the SET 1 variable group is explained by its own canonical variable at a rate of 49.0%. This indicates that the first canonical variable is highly effective in representing the structure of the SET 1 variable set. However, SET 1 is explained by the first canonical variable of SET 2 at only 2.1%. This suggests that SET 1 is not meaningfully represented by the first canonical variable of SET 2.

From the perspective of SET 2, the redundancy indices show that the SET 2 variable group is explained by its own canonical variable at a rate of 11.2%. This proportion indicates that the relationship between SET 2 and its own canonical variable is relatively limited. On the other hand, the relationship between the first canonical function of SET 2 and SET 1 is as low as 3.3%. This finding suggests that the variables in SET 2 have a weak relationship with the first canonical variable of SET 1.

In conclusion, while the first canonical function strongly represents the variables within SET 1, the explanatory power of SET 1 and SET 2 in representing variables from the opposite set is quite low. This result indicates that the first canonical function primarily captures within-group relationships rather than cross-group associations.

4.4.5. Summary of Canonical Correlation Results

The CCA revealed a moderate relationship between UB and PTG (*R*_c = 0.47) with a shared variance of 30%, indicating that UB contribute to PTG in specific ways. UB_UC emerged as the most influential variable in UB, strongly predicting PTG, particularly in the PTG_RO dimension. However, PTG_PS and PTG_AL showed negative associations with UB, suggesting that UB may hinder certain aspects of PTG. The redundancy analysis indicated limited cross-set explanatory power**,** meaning that while unfinished business plays a role in posttraumatic growth, it does not account for all its dimensions equally. The final representation of the variables for canonical correlation analysis are given in Figure 3.

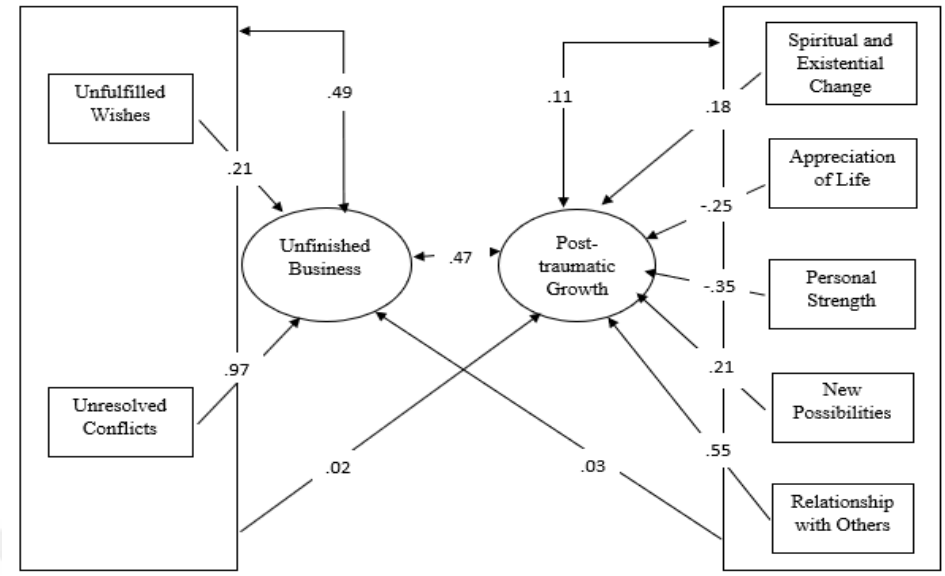

Figure 3. The representation of the variables for canonical correlation analysis.

CHAPTER 5

5. DISCUSSION

This chapter includes discussion of findings of the study with relevant literature review based on five dimensions of posttraumatic growth that are relationship with others, personal strength, appreciation of life, new possibilities and spiritual and existential change with the relation of subdimensions of unfinished business that are unfulfilled wishes and unresolved conflicts. Implications for both research and practice are included with recommendations for further studies are presented according to findings of the study.

5.1. Discussion of Findings

In this study, dimensions of posttraumatic growth are examined with the relation of unfinished business among 6th February Kahramanmaraş earthquake survivors. In addition, unfinished business is examined as unfulfilled wishes and unresolved conflicts, assuming that it emerges after the loss caused by an earthquake-related death. This study investigates the potential relationships between unfinished business and posttraumatic growth by considering existing research and theories, offering insights into the posttraumatic growth experiences of earthquake survivors affected by earthquake-related loss. The study identified that unfinished business following a loss is associated with individuals' posttraumatic growth processes. The multidimensional aspects of unfinished business and posttraumatic growth, along with their relationship, indicate that unfinished business can both facilitate and hinder the processes of posttraumatic growth among earthquake survivors.

Considering the results of the descriptive analysis, the level of posttraumatic growth among the participants was generally found to be moderate. This result is consistent with the studies in literature. When examining studies conducted independently of what the traumatic event is, it has been determined that moderate or high levels of posttraumatic growth experience can occur. This suggests that posttraumatic growth may be another possible trauma response. On the other hand, the passage of time after

the event also plays a role in the posttraumatic growth process. For example, Wu and colleagues (2019) underlined in their meta-analysis on posttraumatic growth that a significant degree of posttraumatic growth was identified six months following the traumatic experiences and in general terms, a significant increase in posttraumatic growth levels or a high level of posttraumatic growth can be observed by the end of the first year following the traumatic event. Substance Abuse and Mental Health Services Administration (2000) addresses the responses and processes following a major disaster by separating the event into one year and the subsequent period. The data collection process of the study was conducted 1.5 years after the earthquake, in accordance with the literature. The data collection process of the study corresponds to the reconstruction phase of this model in terms of timing. The model's reconstruction phase begins from the first anniversary of the disaster (DeWolfe, 2000). In this phase, it is expected that the survivors will recover, recognize the devastating effects of the disaster, and adapt to the new order. At this stage, individuals tend to feel significantly lucky and grateful for having survived, and posttraumatic growth experience is also possible at this point (Black & Flynn, 2021). However, in this study, the participants' levels of posttraumatic growth are at an average level. Consequently, considering that each disaster has its own unique destruction and effects, the magnitude of the area affected by the February 6th Kahramanmaraş-centered earthquake, the extent of the destruction and material losses, and the thousands of deaths it caused have significantly shaken individuals' existing resources. The multi-dimensional and extensive destructive impact of disasters like earthquakes, along with the fact that individuals forming society are affected by the earthquake, leads to a form of collective trauma. Therefore, trauma should be examined not only in its psychological and individual dimensions but also in its societal and social dimensions.

The perspective on evaluating Bronfenbrenner's (1981) bioecological theory in the context of trauma establishes a theoretical relationship with the study findings. According to this model, social support, the intervention of policymakers and non-governmental organizations, and the effective functioning of education and healthcare services play a critical role in compensating for the resources individuals have lost during their recovery, trauma processing, and posttraumatic growth processes. At the same time, the disruptions in daily routines caused by the earthquake, the

psychological and physical damage, and the fulfillment of physical needs are directly related to the functioning of the multilayered systems existing in society. For example, Doğulu (2016) found that among the participants in his study on the effects of Van earthquake, individuals who had access to social support and resources had more effective recovery processes. At this point, social support encompasses not only the assistance provided by small-scale systems such as family and friends but also the support offered by the state, policymakers, and other elements of society. Kahramanmaraş earthquake has devastatingly shaken the resources within individuals' microsystems, such as family and close surroundings, resulting in death and physical damage. Due to the destruction, educational activities were disrupted after the earthquake, and with hospitals and health centers also being negatively affected, there were delays in the implementation of necessary health interventions. In the macrosystem dimension, which constitutes the unique traditions, beliefs, and rituals of the society, disruptive effects have emerged. Many people had difficulty reaching the lifeless bodies of their relatives trapped under the rubble in the February 6 earthquake. Due to the bodies not being found, uncertainty arose about whether they were alive or not. Those who were able to reach the lifeless bodies of their relatives could not perform burial and funeral procedures according to rituals and traditions due to the adverse conditions in the earthquake zone. Due to the unique destructive effects inherent in the nature of each disaster, participants have also experienced negative impacts on the environmental, social, and communal dimensions of the trauma understanding, processing, and resolution process. As a result of all these factors, the low levels of overall posttraumatic growth among participants suggest that the factors mentioned beyond the timing provided by the literature have also played a role.

Upon examining five subdimensions of posttraumatic growth among participants and considering that the total score of posttraumatic growth is average among the participants, the highest average in the study sample was identified in the area of personal strength and appreciation of life, while average levels of growth were noted in the areas of spiritual and existential change as well as new possibilities, the subdimension with the lowest score relative to others was relationship with others. In a cross-cultural context, the predominance of the subdimensions of posttraumatic growth two years post-earthquake in Italy resembles the findings of the current study.

The research undertaken in Italy indicated the dimensions of personal strength and appreciation of life as the areas of highest growth, whereas relationship with others obviously as the lowest growth area compared to other subdimensions (Bianchini et al., 2017). The resemblance in findings between this study's sample and the Italian sample on posttraumatic growth may be attributed to the equivalent duration after the earthquake and the type of disaster is the same.

In other studies, on nature-oriented disasters, personal strength has frequently been found as a component of posttraumatic growth among participants, aligning these findings with existing literature (Leiva-Bianchi et al., 2020; Kyutoku et al., 2021) and following growth area is appreciation of life (Leiva-Bianchi et al., 2020). Among the subdimensions of posttraumatic growth after nature-oriented disasters, the most likely and main reason for the growth observed relatively frequently in the areas of personal strength and appreciation of life could be the feeling of inner strength and gratitude for having survived a sudden and unpredictable event that involved serious levels of death and loss. Nguyen et al., (2023) reviewed 32 longitudinal research related to posttraumatic growth among survivors of nature-oriented disasters and pointed out that significant growth in relationship with others could be possible in the case of the presence of efficient social support. In addition to social support, types of losses, and social solidarity have also been reported as significant predictors of growth in relationship with others. However, considering the sample of the study, there are multiple losses including relatives and loved ones. The losses have significantly destroyed the relational and social support resources available to the survivors following the earthquake. The dimension of relationship with others is likely the area of lowest increase in the current study. However, it should be noted that posttraumatic growth is an experience that involves both a process and an outcome, in addition to its multidimensional structure (Tedeschi et al., 2018). Therefore, the posttraumatic experiences of the current sample may vary over time, and the presence of posttraumatic growth does not exclude negative, destructive reactions related to earthquake-related trauma and loss experiences. In other words, it is possible to mention other factors that accompany the experience of posttraumatic growth, whether supportive or inhibitory, such as unfinished business.

In this study, unfinished business refers to experiences that could not be continued or unresolved situations in the relationship between survivors of the earthquake and their deceased relatives due to the earthquake. In this context, unfinished business is examined in two subdimensions of unresolved issues and unfulfilled wishes. The subdimensions of posttraumatic growth have shown a certain distribution in the descriptive analysis findings. However, when analyzed together with unfinished business variable set, significant changes in the relationships with the subdimensions of posttraumatic growth have been detected. The relationships between the current set of variables have been discussed below.

Unfulfilled wishes did not show a significant relationship with the subdimensions of posttraumatic growth, such as relationship with others, personal strength, appreciation of life, and spiritual/existential change; instead, a relationship was identified with new possibilities. The nature of unfulfilled wishes encompasses more concrete content such as future-oriented dreams, experiences, and plans, and it is thought that the other areas of posttraumatic growth, which are more focused on social and existential contents, may have an impact. On the other hand, when this situation is evaluated together with the results mentioned below, the unfulfilled wishes imagined for the deceased have emerged not only from the nature of the relationship with the person but also due to a death caused by an earthquake. Due to the earthquake, people lost their loved ones quickly, suddenly, and unexpectedly. In addition to the challenging psychological processes created by the earthquake experience, the survivors have had to undergo a bereavement process arising from a disaster whose source remains ambiguous, whether nature-oriented or human-induced. It is believed that this situation is caused by a sense of uncertainty in addition to the sudden and unexpected nature of death. Both the earthquake experience and the loss of their loved ones may have made it difficult for individuals to address their own processes independently of the bereavement process. So, the only experience that the survivors are trying to process is not death, but also the earthquake experience that seriously endangered their own lives. For these reasons, unfulfilled wishes may have weakened the relationship with the subdimensions of posttraumatic growth.

5.1.1. Relationship with Others and Unfinished Business

The subdimension of relationship with others in the posttraumatic growth model encompasses openness to possible relationships with others following a traumatic experience, the ability to seek support from the existing environment and the willingness to provide support, and the perspective of deepening and maintaining ongoing relationships (Tedeschi & Calhoun, 1996). Accordingly, as a result of this study, it was found that individuals who lost their loved ones due to the earthquake had unresolved conflicts in their relationships with the deceased, which is positively related to the area of relationships with others. In this case, it is thought that unresolved conflicts and unfinished relationships from real-life experiences may have developed a lesson for individuals in forming deeper connections in their relationships with others. This situation is consistent with Tedeschi and Calhoun's (2004) descriptive and functional model of posttraumatic growth experience, which involves meaningful cognitive processing, confronting emotional experiences, and the process of making sense of them with the effect of challenge. The unfinished business between the survivors and the deceased, stemming from unresolved conflicts, can also be considered as attempts to compensate for the lost relationship following the earthquake and the experience of loss. On the other hand, due to the nature of large-scale natural events like earthquakes, which involve multiple losses and affect large groups of people, all survivors are simultaneously placed in a disadvantaged and vulnerable position in many aspects. Therefore, it is possible to consider collective trauma. Considering that more than 50,000 people died due to Kahramanmaraş earthquake and thousands are still living in containers and tents, it is possible to observe that a community living in the same area and shared common experiences in micro-system level. It is thought that this situation may reinforce the need for social support in individuals, as well as the desire to form new bonds and maintain the connections that remained after the earthquake.

5.1.2. Personal Strength and Unfinished Business

When examining the growth of the personal strength subdimension in the context of unfinished business, a significant negative relationship has been identified, particularly between unresolved conflicts and personal strength. According to this

finding, as unresolved conflicts increase, the growth in personal strength in individuals decreases. When examining literature, one of the areas of growth frequently observed after nature-oriented disasters such as earthquakes among survivors has been identified as personal strength. However, when the unfinished business variable is examined together with the unresolved conflicts subdimension, a negative relationship has been identified. The earthquake, in itself, is a challenging and life-threatening experience that causes individuals to re-evaluate their own potential, capacity, and limits, shaking their need for control and predictability, while also being reported in the literature as an area where posttraumatic growth can be experienced. However, when considering the experience of death caused by the earthquake in addition to the earthquake experience itself, it is thought that the unfinished business that arises may hinder individuals from recognizing their own potentials and coping capacities. In addition, the negative emotions, thoughts, and beliefs arising from unresolved conflicts can be a negative factor in the process of individuals reconstructing their assumptions about the world and themselves. In Janoff-Bulman's (2010) cognitive perspective of world assumptions, the importance of reconstructing individuals' belief that they are deserving of good things after a traumatic experience is emphasized. However, unfinished business arising from unresolved conflicts with the deceased may overwhelm a person's self-perception, sense of self-efficacy, and core beliefs about themselves beyond their current processing capacity.

5.1.3. Appreciation of Life and Unfinished Business

When the subdimension of appreciation of life is examined in the context of unfinished business, it has been found to be negatively and significantly related to unresolved conflicts. According to this finding, it can be suggested that the presence of unresolved conflicts related to the loss experienced by individuals restricts their potential to appreciate life. Because appreciation of life, as one of the fundamental components of posttraumatic growth, is defined as a gratitude for being alive and for life itself. This sense of gratitude and appreciation can be disrupted by the presence of unresolved conflicts, especially if the individual has experienced a sudden loss due to nature-oriented disasters. According to Gestalt therapy, the presence of unfinished business prevents individuals from being "here and now," representing a being stuck between

the past and the present. Therefore, the inability to resolve the emotional ties to the past for those who survived the earthquake, and the impossibility of addressing this in real-life practices due to the traumatic event, can be decisive in the lack of development of a sense of gratitude towards life in individuals. In parallel, while examining posttraumatic growth experiences among different types of trauma, Karancı et al. (2012) found that among participants with nature-oriented disaster experiences, the appreciation of life subdimension was identified as one of the highest areas of growth, whereas among individuals who experienced loss, this dimension was identified as the lowest area of growth. For survivors of the earthquake, the experience contributes to seeing the rest of their lives as an opportunity or a second chance, while in the case of a loss, it can be concluded that there is a difference in the sense of gratitude derived from surviving the earthquake.

5.1.4. New Possibilities and Unfinished Business

Among the components of posttraumatic growth, new possibilities indicate that the individual is open and willing to new beginnings, re-evaluates and re-establishes their priorities, and expresses a desire to develop alternative paths. In this context, the variable of unfulfilled experiences specifically mentioned in the area of growth contributes to posttraumatic growth in a mutually supportive manner. Unfulfilled experiences refer to certain experiences that could have been lived but are marked by a sense of regret due to death. In other words, this study has demonstrated that it is possible to observe growth in new possibilities in individuals with a high dimension of unfulfilled experiences. It can be concluded that the unexpressed words, unfulfilled plans, and dreams in the relationship with the deceased person after the traumatic experience provide insight into the possibility for the surviving individuals to evaluate potential opportunities and possibilities in the subsequent process. The dreams, wishes, and plans previously made for the deceased one can support the surviving individuals in their search for a new beginning and alternatives. This context also points to the processes aimed at building a new perception of the world following the disruption of fundamental beliefs about the world, in accordance with Tedeschi and Calhoun's (2004) functional and descriptive posttraumatic growth model.

Unlike the other dimensions, unfinished business related to unresolved conflicts did not show a significant relationship in this dimension. The possible and conceptual explanation for this result may be that the new possibilities subdimension represents more future-oriented, targeted, and idealized alternative ways. Specific unfulfilled experiences from the past that remained as regrets can be considered a driving force for survivors to move towards new beginnings for the rest of their lives considering the new current conditions.

5.1.5. Spiritual & Existential Change and Unfinished Business

According to the findings of the study, it has been concluded that there is a low correlation between spiritual/existential change and the subdimensions of unfinished business. This result can be interpreted from both empirical and theoretical domains. First, different variables may mediate the relationship between these two variables. Specifically, religious belief and cultural rituals can function as a mediator role. In the context of posttraumatic growth related to nature-oriented disasters, in particular the area of spiritual and existential change, religious belief is one of the strongest predictor variables (Jang & LaMendola, 2007; Mesidor & Sly, 2019; Fitzpatrick & Spialek, 2020). On the other hand, posttraumatic growth is a unique and internal experience that which individuals question the meaning of life, their presence, and confront their mortality. In this context, it is conceivable that the presence or intensity of unfinished business related to the deceased may influence this growth domain differently across periods following the loss. In addition to the internal processes of this growth area, it is also necessary to evaluate the social and cultural dimensions together. For recovery, reconstruction, and growth experiences to occur as a result of a nature-oriented disaster that can lead to a collective trauma, like Kahramanmaraş earthquake, a collective search for spiritual meaning may be needed. At this point, cultural rituals, symbolic spiritual support addressing the need for belief, and the sense of social belonging are also important. It is thought that if these factors are not included in the process after the traumatic experience, elements that weaken this relationship may emerge. In this study, factors such as the inability of individuals who experienced the February 6 Kahramanmaraş earthquake to reach the deceased bodies of their loved ones, the inability to perform burial procedures by religious and cultural rituals, or the

lack of condolence visits to commemorate the deceased by rituals after death may have disrupted the spiritual meaning-making processes regarding the earthquake-related loss. In parallel with this approach, it is pointed out that the survivors who lost their relatives due to the earthquake in Türkiye on February 6, 2023 emphasized the destructive effect of lack of cultural and religious practices because of the challenging conditions of earthquake area and because of the interruptions of their bereavement process it has been concluded that processing of loss has become more devastating and demanding in addition to the hardship of earthquake experience. The participants also reported that the devastating effect was intensified due to not having the chance of properly practice their cultural rituals to say goodbye. As a result, they generated their rituals to express their loss and process bereavement, which manifests their attempt to fulfill their needs to relate to spiritual and existential (Özcan, 2024).

5.2. Conclusion

The findings of this study highlight the complex and multidimensional relationship between unfinished business and posttraumatic growth among survivors of the February 6th Kahramanmaraş earthquake. While some aspects of unfinished business, particularly unresolved conflicts, appear to hinder growth in certain domains such as personal strength and appreciation of life, they may also serve as a compensatory function in relational development. Similarly, unfulfilled wishes show potential for fostering forward-looking growth through the dimension of new possibilities yet remain largely unrelated to more existential or interpersonal domains. These results emphasize that posttraumatic growth is not a linear or uniformly positive process but is shaped by the survivor's internal experiences, the nature of the loss, and broader social and cultural conditions. The trauma of the earthquake, combined with grief-related unfinished business, creates both obstacles and opportunities for transformation. Overall, the findings underscore the necessity of addressing grief-specific factors such as unfinished business within post-disaster mental health interventions to promote a more nuanced and supportive recovery and growth process.

5.3. Implications for Research and Practice

In nature-oriented disasters, considering that the destruction is multidimensional, and the number and types of losses are multiple, situations and conditions that can be challenging for survivors both in terms of basic needs and psychological aspects arise. In this situation, the counseling interventions to be implemented have critical importance, considering the challenging conditions, to be appropriate and effective in meeting the needs. Beyond need-based interventions, it has been concluded that mental health professionals involved in psychosocial interventions in the field, specifically regarding the February 6th Kahramanmaraş earthquake, should possess greater competence and professional background in terms of applying appropriate techniques and interventions (Mutlu & Koşan, 2024). Therefore, in the psychological counseling processes conducted with individuals who have experienced loss due to the earthquake, the dimensions of unfinished business can be addressed as a functional material in the therapeutic process to support the areas of recovery and posttraumatic growth. These interventions can be integrated into both individual psychological counseling processes and Gestalt-based group psychological counseling processes. In addition, identifying the presence and severity of unfinished business during the therapeutic process with earthquake survivors in the current grief counseling process, while assisting the client become aware of and address their unfinished business, can contribute to the resolution and understanding of grief.

Additionally, this study offers a perspective on clarifying interventions for survivors in two aspects. First, posttraumatic growth, in accordance with its nature, encompasses both the process and the outcome, and different developments are experienced in the five areas of posttraumatic growth at different levels. According to the results of this study, it determines which areas of growth levels should be supported for individuals during the process of psychological interventions. On the other hand, when the unfinished business related to loss is examined in the context of posttraumatic growth, it has been determined that they play a supportive role in certain aspects of posttraumatic growth, while in other aspects, they hinder areas of growth. For this reason, unfinished business, in particular unfulfilled wishes, and unresolved conflicts can be part of the therapeutic process in intervention plans in two separate ways.

Furthermore, as unfinished business in this study pertains to a loss resulting from the earthquake, it is possible that they can be incorporated into grief counseling to facilitate individuals in comprehending the bereavement process, accepting the loss, reflecting on their relationship with the deceased, and ultimately bidding farewell.

This study examines the areas of posttraumatic growth and the nature of unfinished business along with their subdimensions. Therefore, one of the fundamental findings of the study is that the unresolved conflicts subdimension is positively related to posttraumatic growth. However, this subdimension is not consistently related to all areas of posttraumatic growth. Unresolved conflicts are particularly positively related to the relationships with others subdimension but have been found to be negatively related to personal strength and appreciation of life dimensions. Parallel to this study, the multidimensional nature of posttraumatic growth is also gaining importance for individuals who have survived trauma. This creates a necessity in trauma-focused research to examine not only the total score of posttraumatic growth but also each area separately. Unfinished business is not only a negative factor that completely hinders growth but also plays a triggering role that supports growth. However, the multidimensional nature of posttraumatic growth is not solely explained by its relationship with unfinished business. This situation creates a necessity to address posttraumatic growth with other variables. In this context, it is necessary to focus on variables such as trauma-specific emotions like fear, guilt, survivor guilt, cognitive processes like world assumptions, rumination and sense of control, and other loss experiences in the context of nature-oriented disasters. Therefore, other variables that may be related to this experience should be identified and integrated into future research. Furthermore, when examining the detrimental impacts of nature-oriented disasters, it is essential to acknowledge their consequences not only on individuals but also within cultural and societal frameworks. Culture-specific variations, rituals, customs, and communal coping strategies may serve as significant factors promoting posttraumatic growth.

5.4. Recommendations for Further Research

The results of this study provide significant data on posttraumatic growth experiences following nature-oriented disasters and related losses in Türkiye. However, the

findings of this study do not provide a holistic perspective in terms of the current sample, the focused nature-oriented disaster, the examined variables, and demographic criteria. Therefore, first, posttraumatic growth and unfinished business should be re-evaluated at different times, and changes over time should be monitored. Longitudinal studies are needed to better understand the role of unfinished business on posttraumatic growth. Secondly, considering Türkiye's own multicultural structure, studies conducted in a different city or in another country outside of Türkiye could provide significant insights into cultural and regional differences. Thirdly, this study was conducted using a quantitative data collection method. Therefore, in-depth interviews and thematic analyses conducted among trauma survivors regarding their trauma experiences could provide deeper explanations for these concepts. Findings on the relationships between unfinished business and the subdimensions of posttraumatic growth suggest that mediating or moderating variables may be relevant for some subdimensions. Based on qualitative studies, different variables can be identified beyond the possible variables mentioned. In addition to this study, the findings obtained from the subsequent research can enable the development and implementation of intervention-based applications. In addition to unfinished business, Gestalt principles and concepts can be integrated as the foundation of intervention programs, and techniques such as the empty chair, group psychological counseling, role reversal, and role-playing can be included. Additionally, trauma-informed and nature-oriented disaster-focused psychoeducation programs can be developed, and the effectiveness of these programs can be measured through experimental research. Not only Gestalt but also the implementation of programs through multimodal interventions with different theories and approaches will contribute to a more holistic understanding of the relationship between posttraumatic growth and unfinished business, and the effectiveness of post-disaster mental health services can be increased.

REFERENCES

Achterhof, R., Dorahy, M. J., Rowlands, A., Renouf, C., Britt, E., & Carter, J. D. (2017). Predictors of posttraumatic growth 10–11 months after a fatal earthquake. Psychological Trauma Theory Research Practice and Policy, 10(2), 208–215. https://doi.org/10.1037/tra0000286

Adams, C. R., Grad, R. I., & Nice, M. L. (2023). An ecological perspective of intergenerational trauma: Clinical implications. *Journal of Counseling Research and Practice, 8*(1), 4–15. https://doi.org/10.56731/2688-3996.1065

Adelson, J. L., Osborne, J. W., & Crawford, B. F. (2019). Correlation and other measures of association. In G. R. Hancock, L. M. Stapleton, & R. O. Mueller (Eds.), *The reviewer's guide to quantitative methods in the social sciences* (2nd ed., pp. 55–71). Routledge.

Affleck, G., & Tennen, H. (1996). Construing Benefits from Adversity: Adaptational Significance and Dispositional Underpinnings. *Journal of Personality*, *64*(4), 899–922. https://doi.org/10.1111/j.1467-6494.1996.tb00948.x

Akçay, S., Gürbüz, E. B., & Koca, E. (2024). Trauma Levels After the 2023 Kahramanmaraş Earthquakes in Türkiye. *Journal of Social Service Research*, 1–12. https://doi.org/10.1080/01488376.2024.2339967

Akour, I., Rahamneh, A. A. L., Al Kurdi, B., Alhamad, A., Al-Makhariz, I., Alshurideh, M., & Al-Hawary, S. (2023). Using the canonical correlation analysis method to study students' levels in face-to-face and online education in Jordan. *Information Sciences Letters, 12*(2), 901–910. https://doi.org/10.18576/isl/120252

Aldwin, C. M. (1994). *Stress, Coping, and Development: An Integrative Perspective*. http://ci.nii.ac.jp/ncid/BA82541119

Aldwin, C. M. (2007). *Stress, coping, and development: An integrative perspective* (2nd ed.). New York, NY: Guilford Press.

Alfuqaha, O. A., Al-masarwah, U. M., Farah, R. I., Yasin, J. A., Alkuttob, L. A., Muslieh, N. I., Hammouri, M., Jawabreh, A. E., Aladwan, D. A., Barakat, R. O., & Alshubbak, N. H. (2023). The impact of Turkey and Syria earthquakes on University students: Posttraumatic stress disorder symptoms, meaning in life, and social support. *Behavioral Sciences*, *13*(7), 587. https://doi.org/10.3390/bs13070587

American Psychiatric Association. (2013). *Diagnostic and statistical manual of mental disorders (DSM-5)*. American Psychiatric Pub.

American Psychiatric Association. (2022). *Diagnostic and statistical manual of mental disorders (DSM-5)*. American Psychiatric Pub.

American Psychological Association. (2016). *Clinical practice guideline for treatment of posttraumatic stress disorder (PTSD) in adults.*

Amiri, H., Nakhaee, N., Nagyova, I., Timkova, V., Okhovati, M., Nekoei-Moghadam, M., & Zahedi, R. (2021). Posttraumatic growth after earthquake: A systematic review and meta-analysis. *International Journal of Social Psychiatry*, *67*(7), 867-877. https://doi.org/10.1177/0020764021995856

Amstadter, A. B., & Vernon, L. L. (2008). Emotional reactions during and after trauma: A comparison of trauma types. *Journal of Aggression, Maltreatment & Trauma*, *16*(4), 391–408. https://doi.org/10.1080/10926770801926492

Austin, L. S., & Godleski, L. S. (1999). Therapeutic approaches for survivors of disaster. *Psychiatric Clinics of North America*, *22*(4), 897-910.

Balcı, F. (2016). *Intergenerational transmission of earthquake trauma among secondary school students* [Unpublished master's thesis]. Marmara University.

Baldwin, D. V. (2013). Primitive mechanisms of trauma response: An evolutionary perspective on trauma-related disorders. *Neuroscience & Biobehavioral Reviews*, *37*(8), 1549–1566. https://doi.org/10.1016/j.neubiorev.2013.06.004

Bandalos, D. L., & Finney, S. J. (2019). Factor analysis: Exploratory and confirmatory. In G. R. Hancock, L. M. Stapleton, & R. O. Mueller (Eds.), *The reviewer's guide to quantitative methods in the social sciences* (2nd ed., pp. 98–122). Routledge.

Başoğlu, M., Şalcioğlu, E., & Livanou, M. (2002). Traumatic stress responses in earthquake survivors in Turkey. *Journal of Traumatic Stress*, *15*(4), 269–276. https://doi.org/10.1023/a:1016241826589

Benjet, C., Bromet, E., Karam, E. G., Kessler, R. C., McLaughlin, K. A., Ruscio, A. M., Shahly, V., Stein, D. J., Petukhova, M., Hill, E., Alonso, J., Atwoli, L., Bunting, B., Bruffaerts, R., Caldas-De-Almeida, J. M., De Girolamo, G., Florescu, S., Gureje, O., Huang, Y., . . . Koenen, K. C. (2015). The epidemiology of traumatic event exposure worldwide: results from the World Mental Health Survey Consortium. *Psychological Medicine*, *46*(2), 327–343. https://doi.org/10.1017/s0033291715001981

Bentler, P. M., & Bonett, D. G. (1980). Significance tests and goodness of fit in the analysis of covariance structures. *Psychological Bulletin, 88*(3), 588–606. https://doi.org/10.1037/0033-2909.88.3.588

Bianchini, V., Giusti, L., Salza, A., Cofini, V., Cifone, M. G., Casacchia, M., Fabiani, L., & Roncone, R. (2017). Moderate Depression Promotes Posttraumatic Growth (Ptg): A Young Population Survey 2 Years after the 2009 L'Aquila Earthquake. *Clinical Practice and Epidemiology in Mental Health*, *13*(1), 10–19. https://doi.org/10.2174/1745017901713010010

Black, L. L., & Flynn, S. V. (2021). Caring for those affected by disaster. In L. L. Black & S. V. Flynn (Eds.), *Crisis, trauma, and disaster: A clinician's guide* (pp. 155–187). Springer Publishing Company.

Black, L. L., & Flynn, S. V. (2021). Disaster. In L. L. Black & S. V. Flynn (Eds.), *Crisis, trauma, and disaster* (pp. 189-207). SAGE Publications.

Bödvarsdóttir, Í., & Elklit, A. (2004). Psychological reactions in Icelandic earthquake survivors. *Scandinavian Journal of Psychology, 45*(1), 3–13. https://doi.org/10.1111/j.1467-9450.2004.00373.x

Bonanno, G. A. (2008). Loss, trauma, and human resilience: Have we underestimated the human capacity to thrive after extremely aversive events? *Psychological Trauma Theory Research Practice and Policy*, *S*(1), 101–113. https://doi.org/10.1037/1942-9681.s.1.101

Bonanno, G. A., & Mancini, A. D. (2008). The Human Capacity to Thrive in the Face of Potential Trauma. *PEDIATRICS*, *121*(2), 369–375. https://doi.org/10.1542/peds.2007-1648

Boon, H. J., Cottrell, A., King, D., Stevenson, R. B., & Millar, J. (2012). Bronfenbrenner's bioecological theory for modelling community resilience to natural disasters. *Natural Hazards, 60*(2), 381–408. https://doi.org/10.1007/s11069-011-0021-4

Breslau, N. (2001). Outcomes of posttraumatic stress disorder. *Journal of Clinical Psychiatry, 62,* 55–59.

Breslau, N., & Kessler, R. C. (2001). The stressor criterion in DSM-IV posttraumatic stress disorder: An empirical investigation. *Biological Psychiatry, 50*(9), 699-704. https://doi:10.1016/s0006-3223(01)01167

Breuer, J., Freud, S., Strachey, J., Strachey, A., & Richards, A. (1895). *Studies on Hysteria*. http://ci.nii.ac.jp/ncid/BA00321722

Bronfenbrenner, U. (1981). *The ecology of human development*. https://doi.org/10.2307/j.ctv26071r6

Brown, T. A. (2015). *Confirmatory factor analysis for applied research* (2nd ed.). Guilford Press.

Bufka, L. F., Wright, C. V., & Halfond, R. (2020). *Clinical Practice Guideline for the Treatment of Posttraumatic Stress Disorder (PTSD) in Adults*. American Psychological Association.

Calhoun, L. G., & Tedeschi, R. G. (2000). Early posttraumatic interventions: Facilitating possibilities for growth. In B. H. Stamm (Ed.), Posttraumatic stress intervention: Challenges, issues, and perspectives (pp. 135–152). Charles C Thomas Publisher.

Calhoun, L. G., Tedeschi, R. G., Cann, A., & McMillan, J. (2000). A correlational test of the relationship between posttraumatic growth, religion, and cognitive processing. *Journal of Traumatic Stress, 13*(3), 521–527. https://doi.org/10.1023/A:1007745627077

Candemir, G., & Tunc, E. (2024). *Earthquake as a traumatic experience: Earthquake survivors' post-earthquake reactions, meaning-making, and reconstruction processes* (53 pages). Retrieved from Earthquake as a Traumatic Experience:

Earthquake Survivors' Post-Earthquake Reactions, Meaning-Making and Reconstruction Processes by Gülşah Candemir, Erhan Tunc :: SSRN

Cann, A., Calhoun, L. G., Tedeschi, R. G., & Solomon, D. T. (2010). Posttraumatic Growth and Depreciation as Independent Experiences and Predictors of Well-Being. *Journal of Loss and Trauma*, *15*(3), 151–166. https://doi.org/10.1080/15325020903375826

Cannon, T. (1994). Vulnerability analysis and the explanation of 'natural' disasters. In A. Varley (Ed.), *Disasters, development and environment* (pp. 13–30). Wiley.

Caplan, G. (1964). *Principles of preventive psychiatry*. New York: Basic Books.

Carmines, E. G., & McIver, J. P. (1983). An introduction to the analysis of models with unobserved variables. *Political Methodology, 9*, 51–102.

Centre for Research on the Epidemiology of Disasters. (2023). *The human cost of disasters: An overview of the last 20 years (2023 EMDAT report)*. EM-DAT: The International Disaster Database. https://files.emdat.be/reports/2023_EMDAT_report.pdf

Cesur-Soysal, G. (2020). The Unfinished Business in Bereavement Scale-Brief Form: the Turkish adaptation, validity and reliability study. *Anatolian Journal of Psychiatry*, *21*(Suppl. 1), 1. https://doi.org/10.5455/apd.58897

Chambers, A. R. (2015). *A holistic gestalt therapy model for treatment of trauma* (Doctoral dissertation, Pacific University). Retrieved from https://commons.pacificu.edu/spp/1167

Chard, K. M., Schuster, J. L., & Resick, P. A. (2012). Empirically supported psychological treatments: Cognitive processing therapy. In J. G. Beck & D. M. Sloan (Eds.), *The Oxford handbook of traumatic stress disorders* (pp. 439–448). Oxford University Press.

Chen, C., Tan, H. K., Liao, L., Chen, H., Chan, C., Cheng, J., Chen, C., Wang, T., & Lu, M. (2007). Long-term psychological outcome of 1999 Taiwan earthquake survivors: a survey of a high-risk sample with property damage.

Comprehensive Psychiatry, *48*(3), 269–275. https://doi.org/10.1016/j.comppsych.2006.12.003

Christopher, M. (2004). A broader view of trauma: A biopsychosocial-evolutionary view of the role of the traumatic stress response in the emergence of pathology and/or growth. *Clinical Psychology Review*, *24*(1), 75–98. https://doi.org/10.1016/j.cpr.2003.12.003

Cohen, L. H. (1988). Measurement of life events. In L. H. Cohen (Ed.), *Life events and psychological functioning: Theoretical and methodological issues* (pp. 11–30). Newbury Park, CA: Sage.

Cohen, A. (2003). Gestalt therapy and posttraumatic stress disorder: The irony and the challenge. *Gestalt Review*, *7*(1), 42-55. https://doi.org/10.5325/gestaltreview.7.1.0042

Consoli, M. L. M., Delucio, K., Noriega, E., & Llamas, J. (2015). Predictors of Resilience and Thriving Among Latina/o Undergraduate Students. *Hispanic Journal of Behavioral Sciences*, *37*(3), 304–318. https://doi.org/10.1177/0739986315589141

Copley, L., & Carney, J. (2020). Using gestalt techniques to promote meaning making in trauma survivors. *The Journal of Humanistic Counseling*, *59*(3), 201 218. https://doi.org/10.1002/johc.12145

Corey, G. (2009). *Gestalt therapy*. In *Theory and practice of counseling and psychotherapy* (pp. 197–231). Thomson Brooks/Cole.

Cronbach, L. J. (1971). Test validation. In R. L. Thorndike (Ed.), *Educational measurement* (2nd ed., pp. 443–508). American Council on Education.

Dai, W., Chen, L., Tan, H., & Liu, Y. (2016). Association between social support and recovery from posttraumatic stress disorder after flood: A 13–14 year follow-up study in Hunan, China. *BMC Public Health, 16*(1), 194. https://doi.org/10.1186/s12889-016-2871-x

Dalgleish, T., & Power, M. J. (2004). Emotion-specific and emotion-non-specific components of posttraumatic stress disorder (PTSD): implications for a taxonomy of related psychopathology. *Behaviour Research and Therapy*, *42*(9), 1069–1088. https://doi.org/10.1016/j.brat.2004.05.001

Demir, A., Celebi, E., Öztürk, H., et al. (2024). Destructive impact of successive high magnitude earthquakes occurred in Türkiye's Kahramanmaraş on February 6, 2023. *Bulletin of Earthquake Engineering*. https://doi.org/10.1007/s10518-024-01865-5

DeVellis, R. F. (2017). *Scale development: Theory and applications* (4th ed.). Sage Publications.

DeWolfe, D. J. (2000). *Training Manual for Mental Health and Human Service Workers in Major Disasters*.

Dillon, W. R., & Goldstein, M. (1984). *Multivariate analysis: Methods and applications*. Wiley.

Disaster and Emergency Management Authority (AFAD). (2019). What is an earthquake? AFAD. https://www.afad.gov.tr/deprem-nedir

Disaster and Emergency Management Authority (AFAD). (2023). *Disaster analysis and mapping*. Republic of Türkiye Ministry of Interior. https://www.afad.gov.tr/afet-analiz-haritalama

Doğulu, C., Karanci, A. N., & Ikizer, G. (2016). How do survivors perceive community resilience? The case of the 2011 earthquakes in Van, Turkey. *International Journal of Disaster Risk Reduction, 16*, 108–114. https://doi.org/10.1016/j.ijdrr.2016.02.007

Ekanayake, S., Prince, M., Sumathipala, A., Siribaddana, S., & Morgan, C. (2013). "We lost all we had in a second": Coping with grief and loss after a natural disaster. *World Psychiatry, 12*(1), 69-75. https://doi.org/10.1002/wps.20018

Elçi, Ö. (2021). *Predictive factors of posttraumatic stress and posttraumatic growth among the survivors of Van, 2011, earthquakes' trauma* (Doctoral dissertation). Middle East Technical University, Graduate School of Social Sciences, Department of Psychology.

Elder, G. H., Jr. (1974). *Children of the Great Depression: Social change in life experience*. University of Chicago Press.

Epskamp, S. (2022). *semPlot: Path diagrams and visual analysis of various SEM packages* (Version 1.1.6) [Computer software]. https://CRAN.R-project.org/package=semPlot

Erdur-Baker, Ö. (2014). Afetler, Travmalar, Krizler ve Travmatik Stres Tepkileri. In Ö. Erdur-Baker, and T. Doğan (Eds), *Afetler, Krizler, Travmalar ve Psikolojik Destek* (pp. 3-24). Türk PDR Derneği.

Ergün, D., & Şenyüz, S. (2021). Prolonged grief disorder among bereaved survivors after the 2011 Van Earthquake in Turkey. *Death Studies*, *46*(6), 1364–1371. https://doi.org/10.1080/07481187.2021.1884624

Evces, M. R. (2015). Understanding Vicarious Trauma. In G. Quitangon & M. R. Evces (Eds.), *Vicarious Trauma and Disaster Mental Health* (pp. 9-23). Routledge.

Ezerbolat, M., & Yılmaz Özpolat, A. G. (2016). Travma sonrası büyüme: Travmaya iyi yanından bakmak. *Kriz Dergisi*, *24*(0), 20-28. https://doi.org/10.1501/kriz_0000000353

Field, N. P., & Horowitz, M. J. (1998). Applying an empty-chair monologue paradigm to examine unresolved grief. *Psychiatry, 61*(4), 279–287. https://doi.org/10.1080/00332747.1998.11024840

Fitzpatrick, K. M., & Spialek, M. L. (2020). Suicide ideation and a post-disaster assessment of risk and protective factors among Hurricane Harvey survivors. *Journal of Affective Disorders*, *277*, 681–687. https://doi.org/10.1016/j.jad.2020.08.072

Fraenkel, J., Wallen, N., & Hyun, H. (2012). *How to Design and Evaluate Research in Education.* (8th ed.).

Frazier, P. A., & Burnett, J. W. (1994). Immediate Coping Strategies Among Rape Victims. *Journal of Counseling & Development*, *72*(6), 633–639. https://doi.org/10.1002/j.1556-6676.1994.tb01694.x

Freud, S. (1961). *Beyond the pleasure principle* (J. Strachey, Trans.). W. W. Norton & Company.

Fullerton, C. S., & Ursano, R. J. (2005). Psychological and psychopathological consequences of disasters. In J.J. Lopez-Ibor, G. Christodolou, M. Maj, N. Sartorious, and A. Okasha, (Eds*). Disaster and Mental Health* (pp.13-36). NY: Wiley.

Galea, S., & Maxwell, A. R. (2009). Methodological challenges in studying the mental health consequences of disasters. In Y. Neria, S. Galea, & F. H. Norris (Eds.), *Mental health and disasters* (pp. 579–593). Cambridge University Press.

García, F., Páez-Rovira, D., Zurtia, G., Martel, H., & Reyes, A. (2014). Religious Coping, Social Support and Subjective Severity as Predictors of Posttraumatic Growth in People Affected by the Earthquake in Chile on 27/2/2010. *Religions*, *5*(4), 1132–1145. https://doi.org/10.3390/rel5041132

Gold, S. N., Cook, J. M., & Dalenberg, C. J. (2017). *APA Handbook of Trauma Psychology*.

Grauer, H. (1969). Psychodynamics of the Survivor Syndrome. Canadian Psychiatric Association Journal, 14(6), 617–622. https://doi.org/10.1177/070674376901400610

Greenberg, L. S., Rice, L. N., & Elliott, R. (1993). *Facilitating emotional change: The moment-by-moment process*. New York: The Guilford Press.

Güler, K. G., & Albayrak, E. (2024). Goodbyes without farewells under the rubble: A phenomenological study of earthquake victim's methods of coping with ambiguous loss. *International Journal of Social Psychiatry*. https://doi.org/10.1177/00207640241255569

Guo, J., Liu, C., Kong, D., Solomon, P., & Fu, M. (2018). The relationship between PTSD and suicidality among Wenchuan earthquake survivors: The role of PTG and social support. *Journal of Affective Disorders*, *235*, 90–95. https://doi.org/10.1016/j.jad.2018.04.030

Hager, D. L. (1992). Chaos and growth. *Psychotherapy*, *29*(3), 378–384. https://doi.org/10.1037/h0088539

Hair, J. F., Black, W. C., Babin, B. J., & Anderson, R. E. (2019). Multivariate data analysis (8th ed.). Cengage.

Halpern, J., & Tramontin, M. (2006). *Disaster Mental Health: Theory and Practice*. Boston: Cengage.

Halpern, J., & Vermeulen, K. (2017). *Disaster Mental Health Interventions: Core Principles and Practices*. https://openlibrary.org/books/OL28841477M/Disaster_Mental_Health_Interventions

Han Alpay, E., Redican, E., Hyland, P., Karatzias, T., & Shevlin, M. (2024). Correlates of posttraumatic stress disorder in the aftermath of the February 2023 earthquake in Turkey. Journal of Loss and Trauma, 1-18. https://doi.org/10.1080/15325024.2024.2314306

Harms, L., Abotomey, R., Rose, D., Kron, R. W., Bolt, B., Waycott, J., & Alexander, M. (2018). Post disaster Posttraumatic Growth: Positive Transformations Following the Black Saturday Bushfires. *Australian Social Work*, *71*(4), 417–429. https://doi.org/10.1080/0312407x.2018.1488980

Harper, A. R., & Pargament, K. I. (2015). Trauma, religion, and spirituality: Pathways to healing. In K. E. Cherry (Ed.), *Traumatic stress and long-term recovery* (pp. 349–367). Springer.

Harvey, M. R. (1996). An ecological view of psychological trauma and trauma recovery. *Journal of Traumatic Stress,* *9*(1), 3–23. https://doi.org/10.1002/jts.2490090103

Henson, C., Truchot, D., & Canevello, A. (2021). What promotes post traumatic growth? A systematic review. *European Journal of Trauma & Dissociation*, *5*(4), 100195.

Heppner, P. P., Wampold, B. E., & Kivlighan, D. M., Jr. (2008). *Research design in counseling* (3rd ed.). Thomson Brooks/Cole.

Herman, J. L. (1992a). *Trauma and recovery: The aftermath of violence—from domestic abuse to political terror*. Basic Books.

Herman, J. L. (1992b). Complex PTSD: A syndrome in survivors of prolonged and repeated trauma. *Journal of Traumatic Stress*, *5*(3), 377–391. https://doi.org/10.1002/jts.2490050305

Herman, J. L. (2015). *Trauma and Recovery: The Aftermath of Violence--From Domestic Abuse to Political Terror*. Hachette UK.

Hoffman, M. A., & Kruczek, T. (2011). A bioecological model of mass trauma: Individual, community, and societal effects. *The Counseling Psychologist, 39*(8), 1087–1127. https://doi.org/10.1177/0011000010397932

Holland, J. M., Klingspon, K. L., Lichtenthal, W. G., & Neimeyer, R. A. (2018). The Unfinished Business in Bereavement Scale (UBBS): Development and psychometric evaluation. *Death Studies, 44*(2), 65–77. https://doi.org/10.1080/07481187.2018.1521101

Holland, J. M., Klingspon, K. L., Lichtenthal, W. G., & Neimeyer, R. A. (2020). The unfinished business in bereavement scale (UBBS): Development and psychometric evaluation. *Death Studies, 44(2),* 65–77. https://doi.org/10.1080/07481187.2018.1521101

Hollon, S. D., & Garber, J. (1990). Cognitive therapy for depression: A social cognitive perspective. *Personality and Social Psychology Bulletin, 16*(1), 58–73. https://doi.org/10.1177/0146167290161005

Howell, E., & Itzkowitz, S. (2016). *The Dissociative Mind in Psychoanalysis: Understanding and Working with Trauma*. Routledge.

Hrdy, S. B., & Sieff, D. F. (2015). The natural history of mothers and infants: An evolutionary and anthropological perspective. In D. F. Sieff (Ed.), *Understanding and healing emotional trauma: Conversations with pioneering clinicians and researchers* (pp. 182–202). Routledge.

Hu, L., & Bentler, P. M. (1999). Cutoff criteria for fit indexes in covariance structure analysis: Conventional criteria versus new alternatives. *Structural Equation Modeling, 6*(1), 1–55. https://doi.org/10.1080/10705519909540118

Humphreys, K. L., Sauder, C. L., Martin, E. K., & Marx, B. P. (2009). Tonic immobility in childhood sexual abuse survivors and its relationship to

posttraumatic stress symptomatology. *Journal of Interpersonal Violence*, *25*(2), 358-373. https://doi.org/10.1177/0886260509334412

Iverson, K. M., King, M. W., Cunningham, K. C., & Resick, P. A. (2015). Rape survivors' trauma-related beliefs before and after Cognitive processing therapy: Associations with PTSD and depression symptoms. *Behaviour Research and Therapy*, *66*, 49–55. https://doi.org/10.1016/j.brat.2015.01.002

Jang, L., & LaMendola, W. F. (2007). Social Work in Natural Disasters: The Case of Spirituality and Posttraumatic Growth. *Advances in Social Work*, *8*(2), 305–316. https://doi.org/10.18060/208

Janoff-Bulman, R. (1989). Assumptive Worlds and the Stress of Traumatic Events: Applications of the Schema Construct. *Social Cognition*, *7*(2), 113–136. https://doi.org/10.1521/soco.1989.7.2.113

Janoff-Bulman, R. (1991). Understanding people in terms of their assumptive worlds. In D. Ozer, J. Healy, & A. Stewart (Eds.), *Perspectives in personality: Self and emotion* (pp. 99-116). Kingsley.

Janoff-Bulman, R. (2004). Posttraumatic Growth: Three Explanatory Models. *Psychological Inquiry*, *15*(1), 30–34. http://www.jstor.org/stable/20447198

Janoff-Bulman, R. (2010). *Shattered assumptions*. Simon and Schuster.

Jia, X., Liu, X., Ying, L., & Lin, C. (2017). Longitudinal Relationships between Social Support and Posttraumatic Growth among Adolescent Survivors of the Wenchuan Earthquake. *Frontiers in Psychology*, *8*. https://doi.org/10.3389/fpsyg.2017.01275

Jia, X., Ying, L., Zhou, X., Wu, X., & Lin, C. (2015). The effects of extraversion, social support on posttraumatic stress disorder and posttraumatic growth of adolescent survivors of the Wenchuan earthquake. *PLOS ONE, 10*(3), e0121480. https://doi.org/10.1371/journal.pone.0121480

Johnson, T. P. (2014). Snowball sampling: Introduction. In *Wiley StatsRef: Statistics Reference Online*. https://doi.org/10.1002/9781118445112.stat05720

Joseph, S., Williams, R., & Yule, W. (1993). Changes in outlook following disaster: The preliminary development of a measure to assess positive and negative responses. *Journal of Traumatic Stress*, *6*(2), 271–279. https://doi.org/10.1002/jts.2490060209

Joseph, S., Murphy, D., & Regel, S. (2012). An affective–cognitive processing model of post-traumatic growth. *Clinical Psychology & Psychotherapy*, *19*(4), 316-325. https://doi.org/10.1002/cpp.1798

Joyce, P., & Sills, C. (2001). *Skills in Gestalt Counselling & Psychotherapy*. SAGE.

Kabakoğlu, H., & Sahin, F. N. K. (2024). The Effect of Psychological Resilience on Hopelessness and Posttraumatic Growth in Individuals Experienced by Earthquake. *International Journal of Mental Health Promotion*, *0*(0), 1–10. https://doi.org/10.32604/ijmhp.2024.055653

Kaniasty, K. (2011). Predicting social psychological well-being following trauma: The role of postdisaster social support. *Psychological Trauma Theory Research Practice and Policy*, *4*(1), 22–33. https://doi.org/10.1037/a0021412

Karanci, A. N., Işıklı, S., Aker, A. T., Gül, E. İ., Erkan, B. B., Özkol, H., & Güzel, H. Y. (2012). Personality, posttraumatic stress and trauma type: factors contributing to posttraumatic growth and its domains in a Turkish community sample. *European Journal of Psychotraumatology*, *3*(1). https://doi.org/10.3402/ejpt.v3i0.17303

Karataş, Z., & Tüccar, E. (2024). Unveiling the healing power of spirituality: Exploring the impact on post-earthquake trauma among Türkiye survivors. *Spiritual Psychology and Counseling,* *9*(2), 145–168. https://doi.org/10.37898/spiritualpc.1393636

Kardaş, F. (2013). *An examination of posttraumatic stress, posttraumatic growth, and hopelessness levels of university students who experienced the Van earthquake in terms of various variables* (Unpublished master's thesis). Yüzüncü Yıl University.

Katz, C., Tsur, N., Talmon, A., & Nicolet, R. (2021). Beyond fight, flight, and freeze: Towards a new conceptualization of peritraumatic responses to child sexual abuse based on retrospective accounts of adult survivors. *Child Abuse & Neglect*, *112*, 104905. https://doi.org/10.1016/j.chiabu.2020.104905

Kawashima, M., Murakami, M., Kobayashi, T., Takebayashi, Y., Tsubokura, M., Yasutaka, T., & Tamaki, T. (2023). Posttraumatic growth caused by the Great East Japan Earthquake and response to coronavirus disease 2019. *International Journal of Disaster Risk Reduction, 95*, 103917. https://doi.org/10.1016/j.ijdrr.2023.103917

Kılıç, A. F. (2020). Exploratory factor analysis with R software. *Anadolu University Journal of Education Faculty (AUJEF), 4*(3), 276–293. https://doi.org/10.34056/aujef.713374

Kline, R. B. (2000). *Principles Practice of Structural Equation Modeling*. Guilford Press.

Kline, R. B. (2005). *Principles and Practice of Structural Equation Modeling* (2nd ed.). Guilford Press.

Kline, R. B. (2011). *Principles and practice of structural equation modeling* (3rd ed.). The Guilford Press.

Kline, R. B. (2015). *Principles and Practice of Structural Equation Modeling* (4th ed.). Guilford Press.

Klingspon, K. L., Holland, J. M., Neimeyer, R. A., & Lichtenthal, W. G. (2015). Unfinished business in bereavement. *Death Studies, 39*(7), 387–398. https://doi.org/10.1080/07481187.2015.1029143

Koch, S. B. J., Klumpers, F., Zhang, W., Hashemi, M. M., Kaldewaij, R., Van Ast, V. A., Smit, A. S., & Roelofs, K. (2017). The role of automatic defensive responses in the development of posttraumatic stress symptoms in police

recruits: protocol of a prospective study. *European Journal of Psychotraumatology*, *8*(1). https://doi.org/10.1080/20008198.2017.1412226

Koenen, K. C., Ratanatharathorn, A., Ng, L., McLaughlin, K. A., Bromet, E. J., Stein, D. J., Karam, E. G., Ruscio, A. M., Benjet, C., Scott, K., Atwoli, L., Petukhova, M., Lim, C. C., Aguilar-Gaxiola, S., Al-Hamzawi, A., Alonso, J., Bunting, B., Ciutan, M., De Girolamo, G., . . . Kessler, R. C. (2017). Posttraumatic stress disorder in the World Mental Health Surveys. *Psychological Medicine*, *47*(13), 2260–2274. https://doi.org/10.1017/s0033291717000708

Kolk, B. V. (2014). *The body keeps the score: Brain, mind, and body in the healing of trauma*. Penguin.

Kristensen, P., Weisæth, L., & Heir, T. (2012). Bereavement and Mental Health after Sudden and Violent Losses: A Review. *Psychiatry*, *75*(1), 76–97. https://doi.org/10.1521/psyc.2012.75.1.76

Kyutoku, Y., Dan, I., Yamashina, M., Komiyama, R., & Liegey-Dougall, A. J. (2021). Trajectories of posttraumatic growth and their associations with quality of life after the 2011 Tohoku earthquake and tsunami. *Journal of Traumatic Stress, 34*(3), 512–525. https://doi.org/10.1002/jts.22628

Lai, K., & Green, S. B. (2016). The problem with having two watches: Assessment of fit when RMSEA and CFI disagree. *Multivariate Behavioral Research, 51*(2–3), 220–239. https://doi.org/10.1080/00273171.2015.1134306

Lazarus, P. J., Jimerson, S. R., & Brock, S. E. (2002). Natural disasters. In S. E. Brock, P. J. Lazarus, & S. R. Jimerson (Eds.), *Best practices in school crisis prevention and intervention* (pp. 433–448). National Association of School Psychologists.

Leiva-Bianchi, M., Mena, C., Ormazábal, Y., Serrano, C., & Rojas, P. (2020). Changes in geographic clustering of posttraumatic stress disorder and posttraumatic growth seven years after an earthquake in Cauquenes, Chile. *Geospatial Health*, *15*(2). https://doi.org/10.4081/gh.2020.886

Levers, L. L. (2012). An introduction to counseling survivors of trauma: Beginning to understand the context of trauma. In L. L. Levers (Ed.), *Trauma counseling: Theories and interventions* (pp. 1–22). Springer Publishing Company.

Levine, P. A. (1997). *Waking the tiger: Healing trauma: The innate capacity to transform overwhelming experiences.* North Atlantic Books.

Lifton, R. J., & Olson, E. (1976). The Human Meaning of Total Disaster. *Psychiatry*, *39*(1), 1–18. https://doi.org/10.1080/00332747.1976.11023872

Linley, P. A. (2003). Positive adaptation to trauma: Wisdom as both process and outcome. *Journal of Traumatic Stress, 16*(6), 601–610. https://doi.org/10.1023/B:JOTS.0000004086.64509.09

Mahoney, M. J. (1982). Psychotherapy and human change processes. In J. H. Harvey & M. M. Parks (Eds.), *Psychotherapy research and behavior change* (pp. 77–122). American Psychological Association.

Mardia, K. V. (1970). Measures of multivariate skewness and kurtosis with applications. *Biometrika, 57*(3), 519–530. https://doi.org/10.2307/2334770

Maslow, A. H. (1970). *Religions, values, and peak experiences*. Viking Press.

Massazza, A., Brewin, C. R., & Joffe, H. (2020). Feelings, Thoughts, and Behaviors During Disaster. *Qualitative Health Research*, *31*(2), 323–337. https://doi.org/10.1177/1049732320968791

Matsueda, R. L., & Press, G. (2012). Key advances in the history of structural equation modeling. In R. H. Hoyle (Ed.), *Handbook of structural equation modeling* (pp. 17–42). Guilford Press.

McKee P, Barber C. On Defining WISDOM. *The International Journal of Aging and Human Development*. 1999;49(2):149-164. https://doi:10.2190/8G32-BNV0-NVP9-7V6G

Menzel, U. (2022). *CCP: Significance tests for canonical correlation analysis* (R package version 1.1). [Computer software]. https://CRAN.R-project.org/package=CCP

Mertler, C. A., & Vannatta, R. A. (2005). *Advanced multivariate statistical methods: Practical application and interpretation* (3rd ed.). Pyrczak Publishing.

Mesidor, J. K., & Sly, K. F. (2019). Religious coping, general coping strategies, perceived social support, PTSD symptoms, resilience, and posttraumatic growth among survivors of the 2010 earthquake in Haiti. *Mental Health Religion & Culture*, *22*(2), 130–143. https://doi.org/10.1080/13674676.2019.1580254

Miller, W. R. (2004). The phenomenon of quantum change. *Journal of Clinical Psychology*, *60*(5), 453–460. https://doi.org/10.1002/jclp.20000

Miller, W. R., & C'de Baca, J. (1994). Quantum change: Toward a psychology of transformation. In T. F. Heatherton & J. L. Weinberger (Eds.), *Can personality change?* (pp. 253–281). American Psychological Association. https://doi.org/10.1037/10143-011

Moos, R. H., & Schaefer, J. A. (1993). Coping resources and processes: Current concepts and measures. In L. Goldberger & S. Breznitz (Eds.), *Handbook of stress: Theoretical and clinical aspects* (pp. 234–257). Free Press.

Mutlu, Ş., & Koşan, Y. (2024). Counselors' assessment of psycho-social work in post-earthquake disaster zones: Kahramanmaraş, Türkiye. *Current Psychology*. https://doi.org/10.1007/s12144-024-06673-3

Myers, D. G. (1994). *Disaster Response and Recovery: A Handbook for Mental Health Professionals*. DIANE Publishing.

Myers, D. G., & Wee, D. F. (2005). *Disaster Mental Health Services: A Primer for Practitioners*. Psychology Press.

Neimeyer, R. A. (2025). *Living beyond loss: Questions and answers about grief and bereavement.* Taylor & Francis.

Nemeth, D. G., Kuriansky, J., Reeder, K. P., Lewis, A., Marceaux, K., Whittington, T., Olivier, T. W., May, N. E., & Safier, J. A. (2012). Addressing Anniversary Reactions of Trauma Through Group Process: The Hurricane Katrina

Anniversary Wellness Workshops. *International Journal of Group Psychotherapy*, *62*(1), 129–142. https://doi.org/10.1521/ijgp.2012.62.1.129

Neria, Y., & Litz, B. T. (2004). Bereavement by traumatic means: The complex synergy of trauma and grief. *Journal of Loss and Trauma, 9*(1), 73–87. https://doi.org/10.1080/15325020490255322

Nerken, I. R. (1993). Grief and the reflective self: Toward a clearer model of loss resolution and growth. *Death Studies*, *17*(1), 1–26. https://doi.org/10.1080/07481189308252602

Nesse, R. M., & Sieff, D. F. (2015). Emotional evolution: A Darwinian understanding of suffering and well-being. In D. F. Sieff (Ed.), *Understanding and healing emotional trauma: Conversations with pioneering clinicians and researchers* (pp. 203–218). Routledge.

Nguyen, H., Pope, D., & Harms, L. (2023). Long-term posttraumatic growth after natural disasters: A scoping review of contextual influences. *British Journal of Social Work, 53*(7), 2705–2724. https://doi.org/10.1093/bjsw/bcac240

Nishith, P., Nixon, R. D., & Resick, P. A. (2005). Resolution of trauma-related guilt following treatment of PTSD in female rape victims: A result of cognitive processing therapy targeting comorbid depression? *Journal of Affective Disorders*, *86*(2–3), 259–265. https://doi.org/10.1016/j.jad.2005.02.013

Norris, F. H., & Wind, L. H. (2009). The experience of disaster: Trauma, loss, adversities, and community effects. In Y. Neria, S. Galea, & F. H. Norris (Eds.), *Mental health and disasters* (pp. 29-46). Cambridge University Press.

Norris, F. H., Friedman, M. J., & Watson, P. J. (2002). 60,000 Disaster Victims Speak: Part II. Summary and Implications of the Disaster Mental Health Research. *Psychiatry*, *65*(3), 240–260. https://doi.org/10.1521/psyc.65.3.240.20169

Nygaard, E., & Heir, T. (2012). World assumptions, posttraumatic stress and quality of life after a natural disaster: A longitudinal study. *Health and Quality of Life Outcomes, 10*(1), 76. https://doi.org/10.1186/1477-7525-10-76

O'Leary, V. E., & Ickovics, J. R. (1995). Resilience and thriving in response to challenge: An opportunity for a paradigm shifts in women's health. *Women's Health: Research on Gender, Behavior, and Policy, 1*(2), 121–142.

O'Leary, V. E., Alday, C. S., & Ickovics, J. R. (1998). The context for posttraumatic growth: Life crises, individual and social resources, and coping. In R. G. Tedeschi, C. L. Park, & L. G. Calhoun (Eds.), *Posttraumatic growth: Positive changes in the aftermath of crisis* (pp. 127-151). Lawrence Erlbaum Associates.

Önder, E., Tural, Ü., Aker, T., Kılıç, C., & Erdoğan, S. (2006). Prevalence of psychiatric disorders three years after the 1999 earthquake in Turkey: Marmara Earthquake Survey (MES). *Social Psychiatry and Psychiatric Epidemiology*, *41*(11), 868–874. https://doi.org/10.1007/s00127-006-0107-6

Özcan, H. E. (2024). *Turkish adult's grief and grief rituals aftermath in the of an earthquake* (Master's thesis, TED University). Available from Council of Higher Education Thesis Center: https://tez.yok.gov.tr/UlusalTezMerkezi/tezSorguSonucYeni.jsp

Özdemir, E., Bayraktar, F. G. D., & Yıldız, E. (2024). *Earthquake as a traumatic experience: Earthquake survivors' post-earthquake reactions, meaning-making and reconstruction processes* [Preprint]. SSRN. https://doi.org/10.2139/ssrn.4917158

Paivio, S. C., & Greenberg, L. S. (1995). Resolving "unfinished business": efficacy of experiential therapy using empty-chair dialogue. *Journal of consulting and clinical psychology*, *63*(3), 419–425. https://doi.org/10.1037//0022-006x.63.3.419

Perera-Diltz, D. M., Laux, J. M., & Toman, S. M. (2012). A cross-cultural exploration of posttraumatic stress disorder: Assessment, diagnosis, and recommended (Gestalt) treatment. *Gestalt Review, 16*(1), 69–87. https://doi.org/10.5325/gestaltreview.16.1.0069

Perls, F. (1969). *Gestalt therapy verbatim.* Moab, UT: Real People Press.

Perls, F. S., Hefferline, R. F., & Goodman, P. (2011). *Gestalt Therapy: Excitement and Growth in the Human Personality*. The Gestalt Journal Press.

Polster, E., & Polster, M. (1973). *Gestalt therapy integrated*. Vintage Books.

Presidency of Strategy and Budget of the Republic of Türkiye. (2023). *2023 Kahramanmaraş and Hatay earthquakes report*. Presidency of Strategy and Budget of the Republic of Türkiye. https://www.sbb.gov.tr/wp-content/uploads/2023/03/2023-Kahramanmaras-ve-Hatay-Depremleri-Raporu.pdf

Price, J. L., MacDonald, H. Z., Adair, K. C., Koerner, N., & Monson, C. M. (2014). Changing Beliefs about Trauma: A Qualitative Study of Cognitive Processing Therapy. *Behavioural and Cognitive Psychotherapy*, *44*(2), 156–167. https://doi.org/10.1017/s1352465814000526

Ramos, C., & Leal, I. P. (2013). Posttraumatic growth in the aftermath of trauma: A literature review about related factors and application contexts. *Psychology, Community & Health, 2*(1), 43-54. https://doi.org/10.5964/PCH.V2I1.39

Resick, P. A., & Schnicke, M. (1993). *Cognitive Processing Therapy for Rape Victims: A Treatment Manual*. SAGE.

Resick, P. A., LoSavio, S. T., Monson, C. M., Kaysen, D. L., Wachen, J. S., Galovski, T. E., Stirman, S. W., Nixon, R. D., & Chard, K. M. (2024). State of the Science of Cognitive Processing Therapy. *Behavior Therapy*, *55*(6), 1205–1221. https://doi.org/10.1016/j.beth.2024.04.003

Resick, P. A., Monson, C. M., & Chard, K. M. (2016). *Cognitive Processing Therapy for PTSD: A Comprehensive Manual*. Guilford Publications.

Revelle, W. (2023). *psych: Procedures for psychological, psychometric, and personality research* (Version 2.3.6) [R package]. Northwestern University. https://CRAN.R-project.org/package=psych

Robinson, L., Smith, M., & Segal, J. (2024). *Emotional and psychological trauma*. HelpGuide. https://www.helpguide.org/mental-health/ptsd-trauma/coping-with-emotional-and-psychological-trauma

Rosenbloom, D., & Williams, M. B. (2010). *Life After Trauma: A Workbook for Healing*. Guilford Press.

Rosseel, Y. (2012). lavaan: An R package for structural equation modeling. *Journal of Statistical Software, 48*(2), 1–36. https://doi.org/10.18637/jss.v048.i02

Ryan, A. P., & Ripley, J. (2021). Factors Contributing to Posttraumatic Growth Following Bereavement. *OMEGA - Journal of Death and Dying*, *88*(2), 749–764. https://doi.org/10.1177/00302228211051528

Saeed, S. A., & Gargano, S. P. (2022). Natural disasters and mental health. *International Review of Psychiatry*, *34*(1), 16–25. https://doi.org/10.1080/09540261.2022.2037524

Sattler, D. N., Claramita, M., & Muskavage, B. (2017). Natural Disasters in Indonesia: Relationships Among Posttraumatic Stress, Resource Loss, Depression, Social Support, and Posttraumatic Growth. *Journal of Loss and Trauma*, *23*(5), 351–365. https://doi.org/10.1080/15325024.2017.1415740

Schaefer, J. A., & Moos, R. H. (1992). Life crisis and personal growth. In B. N. Carpenter (Ed.), *Personal coping: Theory, research, and application* (pp. 149–170). Praeger.

Schaefer, J. A., & Moos, R. H. (1998). The context for posttraumatic growth: Life crises, individual and social resources, and coping. In R. G. Tedeschi, C. L. Park, & L. G. Calhoun (Eds.), *Posttraumatic growth: Positive changes in the aftermath of crisis* (pp. 99-125). Lawrence Erlbaum Associates.

Schermelleh-Engel, K., Moosbrugger, H., & Müller, H. (2003). Evaluating the fit of structural equation models: Tests of significance and descriptive goodness-of-fit measures. *Methods of Psychological Research Online, 8*(2), 23–74.

Schiraldi G. R. (2000) *The Posttraumatic Stress Disorder Source Book*. Los Angeles, CA: Lowell House.

Serim-Yıldız, B., Onaylı, S., & Erdur-Baker, Ö. (2024). Afetler ve Travma. In Ö. Erdur-Baker, İ. Aksöz Efe, & T. Doğan (Eds.), *Travma Psikolojisi* (4th ed., pp. 377–412). Pegem Akademi.

Shakespeare-Finch, J., & Barrington, A. J. (2012). Behavioural changes add validity to the construct of posttraumatic growth. *Journal of Traumatic Stress*, *25*(4), 433–439. https://doi.org/10.1002/jts.21730

Shang, F., Kaniasty, K., Cowlishaw, S., Wade, D., Ma, H., & Forbes, D. (2022). The impact of received social support on posttraumatic growth after disaster: The importance of both support quantity and quality. *Psychological Trauma: Theory, Research, Practice, and Policy, 14*(7), 1134-1141. https://doi.org/10.1037/tra0001344

Sharf, R. S. (2012). *Theories of psychotherapy and counseling.* Belmont.

Shiro, E. (2023). *The Unexpected Gift of Trauma: The Path to Posttraumatic Growth*. Hachette UK.

Smith, H. L., Summers, B. J., Dillon, K. H., & Cougle, J. R. (2016). Is worst-event trauma type related to PTSD symptom presentation and associated features? *Journal of Anxiety Disorders*, *38*, 55–61. https://doi.org/10.1016/j.janxdis.2016.01.007

Smith, R., McIntosh, V. V. W., Carter, J. D., Colhoun, H., Jordan, J., Carter, F. A., & Bell, C. J. (2016). Thriving after trauma: Posttraumatic growth following the Canterbury earthquake sequence. *Australasian Journal of Disaster and Trauma Studies, 20*(2). http://trauma.massey.ac.nz/issues/2016-2/AJDTS_20-2_Smith.pdf

Stein, D. J., McLaughlin, K. A., Koenen, K. C., Atwoli, L., Friedman, M. J., Hill, E. D., Maercker, A., Petukhova, M., Shahly, V., Van Ommeren, M., Alonso, J., Borges, G., De Girolamo, G., De Jonge, P., Demyttenaere, K., Florescu, S., Karam, E. G., Kawakami, N., Matschinger, H., . . . Kessler, R. C. (2014). DSM-5 and ICD-11 Definitions of Posttraumatic Stress Disorder: Investigating "Narrow" and "Broad" Approaches. *Depression and Anxiety*, *31*(6), 494–505. https://doi.org/10.1002/da.22279

Sudheer Manickam, L. S., & Dubey, B. L. (2021). PTSD and 'Unfinished Business': Can SIS images lead to re-experiencing and Gestalt closure? *SIS Journal of*

Projective Psychology & Mental Health, 28(58-62). https://www.researchgate.net/publication/347752290

Sveen, J., Bergh Johannesson, K., Cernvall, M., & Arnberg, F. K. (2018). Trajectories of prolonged grief one to six years after a natural disaster. *PLOS ONE, 13*(12), e0209757. https://doi.org/10.1371/journal.pone.0209757

Şakiroğlu, M. (2019). Posttraumatic growth among the 1999 Düzce earthquake survivors. *International Journal of Psycho-Educational Sciences, 8*(3), 61–72. https://www.journals.lapub.co.uk/index.php/IJPES

Şanlı, M. E., & Kerkez, M. (2024). Posttraumatic growth and psychological resilience in young adults exposed to an earthquake. *Balıkesır Health Sciences Journal*. https://doi.org/10.53424/balikesirsbd.1484874

Şehlikoğlu, Ş., & Çiçek, N. (2024). Investigation of Psychosocial, Clinical Outcomes of Individuals with Limb Loss After Earthquakes. *Journal of Loss and Trauma*, 1–25. https://doi.org/10.1080/15325024.2024.2402384

Şenyüz, S., Ergün, D., & Çakıcı, E. (2020). The effect of traumatic loss on posttraumatic growth among 2011 Van earthquake survivors: the mediating role of posttraumatic stress. *Anatolian Journal of Psychiatry*, *0*, 1. https://doi.org/10.5455/apd.135624

Tabachnick, B. G., & Fidell, L. S. (2007). *Experimental designs using ANOVA* (Vol. 724). Thomson/Brooks/Cole.

Tabachnick, B. G., & Fidell, L. S. (2013). *Using multivariate statistics* (6th ed.). Pearson Education Inc.

Tabachnick, B. G., & Fidell, L. S. (2019). *Using multivariate statistics* (7th ed.). Pearson.

Tang, C. S. (2006). Positive and negative postdisaster psychological adjustment among adult survivors of the Southeast Asian earthquake–tsunami. *Journal of*

Psychosomatic Research, *61*(5), 699–705. https://doi.org/10.1016/j.jpsychores.2006.07.014

Taylor, M. (2014). *Trauma therapy and clinical practice: Neuroscience, gestalt and the body*. McGraw-Hill Education (UK).

Tedeschi, R. G., & Calhoun, L. G. (1995). *Trauma and Transformation: Growing in the Aftermath of Suffering*. SAGE Publications.

Tedeschi, R. G., & Calhoun, L. G. (1996). The posttraumatic growth inventory: Measuring the positive legacy of trauma. *Journal of Traumatic Stress*, *9*(3), 455-471. https://doi.org/10.1007/bf02103658

Tedeschi, R. G., Park, C. L., & Calhoun, L. G. (1998). *Posttraumatic Growth: Positive Changes in the Aftermath of Crisis*. Routledge.

Tedeschi, R. G., Park, C. L., & Calhoun, L. G. (1998). Posttraumatic Growth: Conceptual Issues. In R. G. Tedeschi, C. L. Park, & L. G. Calhoun (Eds.), *Posttraumatic growth: Positive changes in the aftermath of crisis* (pp. 1-22). Lawrence Erlbaum Associates.

Tedeschi, R. G., & Calhoun, L. G. (2004). TARGET ARTICLE: "Posttraumatic Growth: Conceptual Foundations and Empirical Evidence." *Psychological Inquiry*, *15*(1), 1–18. https://doi.org/10.1207/s15327965pli1501_01

Tedeschi, R. G., Cann, A., Taku, K., Senol-Durak, E., & Calhoun, L. G. (2017). The Posttraumatic Growth Inventory: A Revision Integrating Existential and Spiritual Change. *Journal of Traumatic Stress*, *30*(1), 11–18. https://doi.org/10.1002/jts.22155

Tedeschi, R. G., Shakespeare-Finch, J., Taku, K., & Calhoun, L. G. (2018). *Posttraumatic Growth: Theory, Research, and Applications*. https://eprints.qut.edu.au/120810/

Temurtaş, A. (2016). Kanonik korelasyon analizi. In C. O. Güzeller (Ed.), *Herkes için çok değişkenli istatistik* (pp. 101–112). Maya Akademi.

Thomas, L. E., DiGiulio, R. C., & Sheehan, N. W. (1991). Identifying loss and psychological crisis in widowhood. *International Journal of Aging and Human Development, 26*, 279-295.

Tirgari, B., Forouzi, M. A., & Malakian, L. (2016). Being Under the Umbrella of Persistent Grief: Experiences of Survivors of Bam Earthquake. *Issues in Mental Health Nursing*, *37*(5), 344–352. https://doi.org/10.3109/01612840.2016.1155004

Tucker, L. R., & Lewis, C. (1973). A reliability coefficient for maximum likelihood factor analysis. *Psychometrika, 38*(1), 1–10. https://doi.org/10.1007/BF02291170

Turan, N. (2024). Travma Sonrası Büyüme (TSB): Tanımı, Doğası, Yaklaşımlar ve İlişkili Değişkenler. In Ö. Erdur-Baker, İ. Aksöz-Efe, & T. Doğan (Eds.), *Travma Psikolojisi* (4th ed., pp. 107-142). Pegem Akademi.

Turan, N., & Tanacıoğlu Aydın, B. (2024). Travma ve travmatik tepkiler. In Ö. Erdur-Baker, İ. Aksöz-Efe, & T. Doğan (Eds.), *Travma Psikolojisi* (4th ed., pp. 1-22). PEGEM Akademi.

U.S. Department of Health and Human Services, Substance Abuse and Mental Health Services Administration. (2000). *Training manual for mental health and human services workers in major disasters* (2nd ed.). Washington, DC. https://ftp.snoco.org/Human_Services/HCS-OCHS/SR530-MULTI-AGENCYTASKFORCE/Handouts/Emotional%20Phases%20of%20a%20Disaster.pdf

UNFPA. (2024). *Situation report: Türkiye earthquake response after 1 year*. https://turkiye.unfpa.org/en/eq-1st-year-sitrep

Updegraff J. A., & Taylort S. E. (2000). From Vulnerability to Growth: Positive and Negative Effects of Stressful Life Events. In J. H. Harvey & E. D. Miller (Eds.), *Loss and Trauma: General and Close Relationship Perspectives* (pp. 3-28). Routledge.

Ursano, R. J., Fullerton, C. S., & Norwood, A. E. (2003). *Terrorism and disaster paperback with CD-ROM: Individual and community mental health interventions*. Cambridge University Press.

Valdez, C. E., & Lilly, M. M. (2014). Posttraumatic Growth in Survivors of Intimate Partner Violence. *Journal of Interpersonal Violence*, *30*(2), 215–231. https://doi.org/10.1177/0886260514533154

Van Der Kolk, B. (2000). Posttraumatic stress disorder and the nature of trauma. *Dialogues in Clinical Neuroscience*, *2*(1), 7–22. https://doi.org/10.31887/dcns.2000.2.1/bvdkolk

Voltan Acar, N. (2015). *Yeniden terapötik iletişim: Kişiler arası ilişkiler* (13th ed.). Nobel Yayıncılık.

Voltan Acar, N. (2017). *Gestalt terapi: Ne kadar farkındayım?* (7th ed.). Nobel Akademik Yayıncılık

Voltan Acar, N. (2019). *Grupla psikolojik danışmada alıştırmalar – Deneyler* (7th ed.). Nobel Yayıncılık.

Voltan Acar, N. (Ed.). (2020). *Dictionary of psychological counseling and guidance terms: English / Turkish – Psikolojik danışma ve rehberlik terimleri sözlüğü: İngilizce / Türkçe* (3rd ed.). Nobel Yayıncılık.

Voltan Acar, N. (Ed.). (2024). *Group psychological counseling: Principles and techniques* (18th ed.). Nobel Akademik Yayıncılık.

Walker, L. E. A. (2017). Trauma practice: Historical overview. In S. N. Gold (Editor-in-Chief), C. J. Dalenberg & J. M. Cook (Associate Eds.), *APA handbook of trauma psychology* (pp. 1-27). American Psychological Association.

Walsh, F. (2007). Traumatic loss and major disasters: Strengthening family and community resilience. *Family Process*, *46*(2), 207–227. https://doi.org/10.1111/j.1545-5300.2007.00205.x

Wastell, C. (2005). *Understanding Trauma and Emotion: Dealing with trauma using an emotion-focused approach*. https://researchers.mq.edu.au/en/publications/understanding-trauma-and-emotion-dealing-with-trauma-using-an-emo

Wastell, C. (2020). *Understanding trauma and emotion: Dealing with trauma using an emotion-focused approach*. Routledge.

Williams, T. (1988). Diagnosis and Treatment of Survivor Guilt. In J. Wilson, B. Kahana, & Z. Harel (Eds.), *Human Adaptation to Extreme Stress From the Holocaust to Vietnam* (pp. 319–336). Springer Science+Business Media.

Wilson, B., Morris, B. A., & Chambers, S. (2014). A structural equation model of posttraumatic growth after prostate cancer. *Psycho-Oncology*, *23*(11), 1212-1219.

World Health Organization. (2023a). *WHO flash appeal: Earthquake response in Türkiye and whole of Syria*. https://www.who.int/publications/m/item/who-flash-appeal--earthquake-response-in-t-rkiye-and-whole-of-syria

World Health Organization. (2023b). Dealing with the psychological aftershocks of the Türkiye earthquakes: Why mental health and psychosocial support are so desperately needed. *World Health Organization*. https://www.who.int/europe/news/item/09-03-2023-dealing-with-the-psychological-aftershocks-of-the-t-rkiye-earthquakes--why-mental-health-and-psychosocial-support-are-so-desperately-needed

World Health Organization. (2024). *Posttraumatic stress disorder (PTSD)*. https://www.who.int/news-room/fact-sheets/detail/posttraumatic-stress-disorder

Wu, X., Kaminga, A. C., Dai, W., Deng, J., Wang, Z., Pan, X., & Liu, A. (2019). The prevalence of moderate-to-high posttraumatic growth: A systematic review and meta-analysis. *Journal of Affective Disorders*, *243*, 408–415. https://doi.org/10.1016/j.jad.2018.09.023

Yalom, I. D., & Lieberman, M. A. (1991). Bereavement and Heightened Existential Awareness. *Psychiatry*, *54*(4), 334–345. https://doi.org/10.1080/00332747.1991.11024563

Yıldırım, M. H., Yıldız, M. İ., Başterzi, A. D., Yıldırım, E. A., Yüksel, Ş., Aker, A. T., Semerci, B., Çakıroğlu, S., Yazgan, Y., Sercan, M., Erim, B. R., & Küçükparlak, İ. (2023). Preventive and Therapeutic Mental Health Care after

the Earthquake- Expert Opinion from the Psychiatric Association of Turkey. *Turkish Journal of Psychiatry*. https://doi.org/10.5080/u27305

Yıldırım, K. (2022). *Traumatic effects of earthquake on secondary school students: A qualitative study* (Unpublished master's thesis). Atatürk University.

Yılmaz, Y., Uçar, C., & Yıldız, S. (2024). Activities of the hypothalamo-pituitary-adrenal axis and autonomic nervous system following a strong earthquake. Stress and Health, 40(1), e3281. https://doi.org/10.1002/smi.3281

Yu, Y., Peng, L., Chen, L., Long, L., He, W., & Wang, T. (2014). Resilience and social support promote post-earthquake well-being by mediating the influence of depression and posttraumatic stress symptoms on quality of life. *Disaster Medicine and Public Health Preparedness, 8*(2), 175–181. https://doi.org/10.1017/dmp.2014.15

APPENDICES

A. APPROVAL OF THE ETHICS COMMITTEE

TED ÜNİVERSİTESİ
İNSAN ARAŞTIRMALARI ETİK KURULU
ETİK KURUL KARARLARI
Sayı: 2024-37 Tarih: 08/10/2024

Toplantı Sayısı:	2024-37
Toplantı Tarihi ve Saati:	08 Ekim 2024 Saat: 13.00
Toplantı Yeri:	Zoom üzerinden yapılmıştır.
Katılanlar:	Dr. Öğr. Üyesi Kıymet Duygu ERDAŞ – Başkan Dr. Öğr. Üyesi Duygu Onay Çoker - Raportör Dr. Öğr. Üyesi Elçin Emre AKDOĞAN - Üye Dr. Öğr. Üyesi Çağla Öneren ŞENDİL - Üye Doç. Dr. Melike Ünal GEZER - Üye Doç. Dr. Beril Türkoğlu DEMİREL - Üye
Raportör:	Dr. Öğr. Üyesi Duygu Onay Çoker

GÖRÜŞME MADDELERİ :

G.09 : TED Üniversitesi, Eğitim Bilimleri Bölümü Rehberlik ve Psikolojik Danışmanlık Anabilim Dalı Dr. Öğretim Üyesi Begüm Serim Yıldız' ın "Travma Sonrası Büyüme, Bitirilmemiş İşler ve Travmaya Bağlı Hayatta Kalma Suçluluğu Arasındaki İlişkinin İncelenmesi" başlıklı çalışmasının araştırma etiğine uygunluğu görüşüldü.

Karar 2024-37/09 : TED Üniversitesi, Eğitim Bilimleri Bölümü Rehberlik ve Psikolojik Danışmanlık Anabilim Dalı Dr. Öğretim Üyesi Begüm Serim Yıldız' ın "Travma Sonrası Büyüme, Bitirilmemiş İşler ve Travmaya Bağlı Hayatta Kalma Suçluluğu Arasındaki İlişkinin İncelenmesi" başlıklı çalışmasına,

ONAY KARARI VERİLDİ.

Toplantı saat 14.15 sona erdi.

A-2. OTHER PERMISSIONS

A-2.1. PTGI-X Permissions

A.2.2. UBBS-Short Form Permissions

B. INFORMED CONSENT FORM

Değerli Katılımcı,

Bu araştırma TED Üniversitesi Rehberlik ve Psikolojik Danışmanlık Yüksek Lisans öğrencisi Elif Torun tarafından Dr.Öğr.Üyesi Begüm Serim-Yıldız'ın tez danışmanlığı doğrultusunda yürütülmektedir. Bu çalışmanın amacı, 6 Şubat Kahramanmaraş depremini yaşayan bireyler arasında travma sonrası büyüme ve bitirilmemiş işler arasındaki ilişkiyi incelemektir. Bu sebeple katıldığınız ankette sizlere deprem deneyiminize ve deprem kaynaklı kayıplarınıza ilişkin duygu ve düşüncelerinizle ilgili maddeler bulunmaktadır. Çalışmanın bazı bölümleri duygusal olarak zorlayıcı olabilir ve günlük yaşantınızın üzerinde bir stres veya kaygıya neden olabilir. Katılımınız sırasında kendinizi rahatsız, endişeli veya stresli hissedebilirsiniz. Herhangi bir şekilde rahatsızlık hissetmeniz durumunda hiçbir yaptırım olmaksızın çalışmadan ayrılma veya ara verme hakkınız bulunmaktadır. Çalışmadan ayrılmanız durumunda yanıtlarınız kaydedilmeyecektir.

Çalışmanın sonunda yaşadığınız depremin ardından deneyimlemiş olabileceğiniz olası duygu, düşünce ve tepkilerin neler olabileceği, nasıl başa çıkabileceğiniz ve bu süreçte kendinize ve çevrenize nasıl destek olabileceğinize ilişkin birtakım dokümanlar ve ücretsiz psikolojik destek sağlayan kurum ve kuruluş bilgileri paylaşılacaktır. Çalışma yaklaşık 15 dakika sürecektir. Katılımınız tamamen gizli tutulacak olup kimliğinizi belirleyen herhangi bir bilgi talep edilmeyecektir, ankete verdiğiniz cevaplar gizlilikle saklanacak olup sadece araştırmacı tarafından değerlendirilecektir. Bu formu okuyup aşağıdaki kutucuğu işaretlediğinizde, araştırmaya katılmayı kabul etmiş olacaksınız. Çalışmanın devamında, deprem deneyiminizle ilgili soruları samimi bir şekilde cevaplamanız beklenmektedir. Araştırmanın amacı veya süreci ile ilgili daha fazla bilgi almak isterseniz aşağıdaki iletişim adresinden araştırmacıya ulaşabilirsiniz.

Katılımlarınız için teşekkür ederiz.

Bu çalışmaya tamamen gönüllü olarak katılıyorum ve istediğim zaman yarıda bırakıp çıkabileceğimi biliyorum. Verdiğim bilgilerin bilimsel amaçlı yayımlarda kullanılmasını kabul ediyorum. Bilgilerimin akademik çalışmalar dışında kesinlikle kullanılmayacağını biliyorum.

( ) Evet

( ) Hayır

C. INSTRUMENTS

C.1. Unfinished Business in Bereavement Scale-Short Form

Hayatlarında önemli bir kişiyi kaybetmiş olan insanlar bazen kaybettikleri kişi ile aralarında bir şeylerinsöylenmemiş, bitmemiş ya da çözülmemiş olduğu duygusuna sahip olabilirler.

Aşağıda sizin de deneyimlemiş olabileceğiniz farklı "bitmemiş iş" türlerinin listesi bulunmaktadır. Lütfenher bir ifade için, geçen ay bu konuyla ilgili ne kadar sıkıntı hissettiğinizi belirtin.

Geçtiğimiz ay bu konuda ne kadar sıkıntılı hissettiniz?

1: Hiç sıkıntılı hissetmiyorum2: Biraz sıkıntılı hissediyorum
3: Orta düzeyde sıkıntılı hissediyorum4: Oldukça sıkıntılı hissediyorum
5: Çok fazla sıkıntılı hissediyorum

Geçtiğimiz ay bu konuda ne kadar sıkıntılı hissettiniz?	**Hiç (1)**	**Biraz (2)**	**Orta (3)**	**Oldukça (4)**	**Çok fazla (5)**
1. Keşke birlikte daha çok şey yapmış olsaydık.	1	2	3	4	5
2.	1	2	3	4	5
3. Ona daha sık 'seni seviyorum' demeliydim.	1	2	3	4	5
4.	1	2	3	4	5
5. Keşke benim için ne kadar önemli olduğunu ona söylemiş olsaydım.	1	2	3	4	5
6.	1	2	3	4	5
7. Keşke ona veda etme şansını yakalayabilseydim.	1	2	3	4	5
8.	1	2	3	4	5

E. THESIS PERMISSION FORM

Anabilim Dalı:

YAZARIN

Soyadı :

Adı :

Bölümü :

TEZİN ADI (İngilizce) :

TEZİN TÜRÜ : Yüksek Lisans ☐ Doktora ☐

1. Tezimin tamamından kaynak gösterilmek şartıyla fotokopi alınabilir. ☐
2. Tezimin içindekiler sayfası, özet, indeks sayfalarından ve/veya bir bölümünden kaynak gösterilmek şartıyla fotokopi alınabilir. ☐
3. Tezimden bir bir (1) yıl süreyle fotokopi alınamaz. ☐

TEZİN KÜTÜPHANEYE TESLİM TARİHİ: