T.C.

TED UNIVERSITY

GRADUATE SCHOOL

PSYCHOLOGICAL COUNSELING AND GUIDANCE

THE MEDIATING ROLE OF POSITIVE DYADIC COPING IN THE ASSOCIATION BETWEEN PSYCHOLOGICAL SYMPTOMS AND MARITAL SATISFACTION

F.MERVE DEMİR

ANKARA, 2024

THE MEDIATING ROLE OF POSITIVE DYADIC COPING IN THE ASSOCIATION BETWEEN PSYCHOLOGICAL SYMPTOMS AND MARITAL SATISFACTION

A Thesis Submitted To
The Graduate School
of
TED University

by

F.Merve Demir

In Partial Fulfillment of The Requirements
For
The Degree of Master of Science
In
Psychological Counseling and Guidance

Ankara, 2024

Approval of the Graduate School

_____

Prof. Dr. Ayça Tekin-Koru
Dean, Graduate School

_____

Assoc. Prof. Dr. Tolga Erdoğan
Program Chair

This is to certify that we have read this thesis and that in our opinion it is fully adequate, in scope and quality, as a thesis for the degree of Master of Science.

_____

Dr. S. Burcu Özgülük Üçok
Supervisor

Examining Committee Members

Dr. Eda Çürükvelioğlu Köksal (Committee Chair) _____
(Bartın Uni., EBB)

Dr. S. Burcu Özgülük Üçok _____
(TEDU, EDS)

Dr. Olcay Yılmaz _____
(TEDU, EDS)

I hereby declare that all information in this document has been obtained and presented in accordance with academic rules and ethical conduct. I also declare that, as required by these rules and conduct, I have fully cited and referenced all material and results that are not original to this work.

Name, Last name : F.Merve Demir

Signature :

ABSTRACT

THE MEDIATING ROLE OF POSITIVE DYADIC COPING IN THE ASSOCIATION BETWEEN PSYCHOLOGICAL SYMPTOMS AND MARITAL SATISFACTION

F.MERVE DEMİR
Master of Science, Psychological Counseling and Guidance
Supervisor : Dr. S. Burcu Özgülük Üçok

May, 2024

The purpose of the current study is to investigate the mediating role of positive dyadic coping in the association between psychological symptoms and marital satisfaction in dual-career married couples living in Türkiye. The sample consisted of 120 dual-career couples (120 women, 120 men) who have been married for at least three months. Participants were recruited via snowball and purposeful sampling techniques. Depression Anxiety Stress Scale, Dyadic Coping Inventory, Marital Satisfaction Scale and a demographic form were used to collect data. The mediating role of positive dyadic coping in the association between psychological symptoms and marital satisfaction was examined via the Actor-Partner Interdependence Model. Independent samples t-test was conducted to determine whether participants' psychological symptoms, positive dyadic coping, and marital satisfaction differed by gender. Pearson product-moment correlation coefficients were calculated to analyze the relationships between the predictor (psychological symptoms), mediator

(positive dyadic coping) and criterion variable (marital satisfaction). Results of Actor-Partner Interdependence Model analyzes revealed that association between psychological symptoms and marital satisfaction were mediated by positive dyadic coping for both wives and husbands. As a result, the findings were discussed in connection with the relevant literature, and suggestions for future research were presented.

Keywords: dual-career marriage, positive dyadic coping, psychological symptoms, marital satisfaction

ÖZ

PSİKOLOJİK BELİRTİLER VE EVLİLİK DOYUMU ARASINDAKİ İLİŞKİDE STRESLE ÇİFT OLARAK POZİTİF BAŞ ETMENİN ARACI ROLÜ

F.MERVE DEMİR
Yüksek Lisans, Rehberlik ve Psikolojik Danışmanlık
Tez Yöneticisi : Dr. S. Burcu Özgülük Üçok

Mayıs, 2024

Bu çalışmanın amacı, Türkiye'de yaşayan çift kariyerli evli, çiftlerde psikolojik belirtiler ve evlilik doyumu arasındaki ilişkide stresle çift olarak pozitif baş etmenin aracı rolünü araştırmaktır. Örneklem, en az altı aydır evli çift kariyerli 120 çiftten (120 kadın, 120 erkek) oluşmuştur. Katılımcılara kartopu ve amaçlı örnekleme teknikleri kullanılarak ulaşılmıştır. Çalışmada verilerin toplanması amacıyla Depresyon Kaygı Stres Ölçeği, Stresle Çift Olarak Baş Etme Envanteri, Evlilik Doyumu Ölçeği ve demografik form kullanılmıştır. Psikolojik belirtiler ile evlilik doyumu arasındaki ilişkide stresle çift olarak pozitif başa çıkmanın aracı rolü Aktör-Partner Karşılıklı Bağımlılık Modeli aracılığıyla incelenmiştir. Katılımcıların psikolojik belirtileri, stresle çift olarak pozitif baş etmeleri ve evlilik doyumlarının cinsiyete göre değişip değişmediğini belirlemek için bağımsız örneklemler t-testi

yapılmıştır. Yordayıcı (psikolojik belirtiler), aracı (stresle çift olarak pozitif baş etme) ve ölçüt değişken (evlilik doyumu) arasındaki ilişkiler analiz edebilmek için Pearson momentler çarpımı korelasyon katsayıları hesaplanmıştır Aktör-Partner Karşılıklı Bağımlılık Modeli analizlerinin sonuçları, stresle çift olarak pozitif baş etmenin psikolojik semptomlar ile evlilik doyumu arasındaki ilişkide hem kadınlar hem de erkekler için aracı rolünü ortaya koymuştur. Bulgular ilgili alanyazınla bağlantılı olarak tartışılmış ve gelecekte yapılacak araştırmalara yönelik öneriler sunulmuştur.

Anahtar Kelimeler: çift kariyerli evlilikler, stresle çift olarak pozitif baş etme, psikolojik belirtiler, evlilik doyumu

To my husband, who always looks at me with believing eyes, and to my daughter

ACKNOWLEDGMENTS

First of all, as in every process, the thesis process required patience, strength, knowledge, dedication, and understanding. I would like to thank my advisor, Prof. Dr. Burcu Özgülük Üçok, for her academic support when my knowledge was insufficient and for her emotional support when I had difficulty progressing. I feel very fortunate to have continued the process under her guidance.

I would like to thank my mother, Aysun Yavuzcan, and my father, Abdurrahman Yavuzcan, who have supported and believed in me not only during my thesis process but also at every moment of my life. You have always shed light on my path throughout my academic journey and have always motivated me by celebrating my successes. I'm glad to have you as my precious family.

I would also like to thank my valuable professors, whom I met during the enjoyable and challenging thesis process, for their academic support, and my friends for their social-emotional support. The process was very enjoyable with you.

I am grateful to my friends for being my emotional supporters not only during my thesis process but also in every moment of my life. I will always appreciate their academic support as well. I'm glad to have you, my dear friends.

Finally, I would like to express my heartfelt thanks to my precious husband, Ulvi Demir, for his emotional support throughout the process, his endless love, and his belief in me. I want to change the saying "You get to know a person during the journey" to "You get to know a person during the thesis process." You made me realize over and over again that I made the best decision in my life with your faith and patience in me every second of my thesis. I love you very much, my dear husband, my companion.

TABLE OF CONTENTS

ABSTRACT iii
ÖZ v
ACKNOWLEDGMENTS viii
TABLE OF CONTENTS ix
LIST OF TABLES xii
LIST OF FIGURES xiii
LIST OF ABBREVIATIONS xiv
1. INTRODUCTION 1
1.1. Background to the Study 1
1.2. Purpose of the Study 4
1.3. Research Questions and Hypotheses of the Study 5
1.4. Significance of the Study 5
1.5. Definition of the Terms 9
2. LITERATURE REVIEW 10
2.1. Definition and Nature of Dyadic Coping 10
2.1.1. Theories of Dyadic Coping 13
2.1.2. Empirical Studies of Dyadic Coping 16
2.2. Definition and Nature of Psychological Symptoms 18
2.2.1. Depression 19
2.2.2. Anxiety 20
2.2.3. Stress 20
2.2.4. Empirical Studies of Psychological Symptoms 22
2.3. Definition and Nature of Marital Satisfaction 24
2.3.1. Nature of Dual-Career Marriages 27
2.3.2. Empirical Studies of Marital Satisfaction 29
2.4. Summary 33
3. METHOD 35
3.1. Research Design 35
3.2. Participants of the Main Study 35
3.3. Data Collection Instruments 37

3.3.1. Pilot Study....37
3.4. Data Collection Procedure of the Main Study....56
3.5. Data Analyses Procedure....56
3.5.1. Overview of the Actor-Partner Interdependence Model (APIM)....57
3.6. Limitations of the Study....57
4. RESULTS....59
4.1.1. Data Screening Prior to Analyses....59
4.2. Descriptive Statistics....62
4.2.1. Means, Standard Deviations, and Gender Differences on the Main Study Variables....62
4.2.2. Bivariate Correlations....63
4.3. Testing the Main Hypotheses....65
4.4. Mediating Role of Positive Dyadic Coping in Association between the Psychological Symptoms and Marital Satisfaction....66
4.4.1. Actor Effects....67
4.4.2. Partner Effects....67
4.5. Hypotheses Testing....70
4.6 Summary of the Findings....71
5. DISCUSSION....72
5.1. Discussion of the Findings....72
5.1.1 Discussion of Actor Effects....73
5.1.2 Discussion of Partner Effects....76
5.1.3 Discussion of Mediation Effects....78
5.2. Conclusion....79
5.3. Implications....79
5.3.1. Theoretical Implications....79
5.3.2. Practical Implications....80
5.4. Recommendations....81
REFERENCES....83
APPENDICES....104
A. APPROVAL OF THE ETHICS COMMITTEE....104
A-2. PERMISSION LETTER FOR TURKISH ADAPTATION OF DYADIC COPING INVENTORY (DCI)....105

A-3. PERMISSION LETTER FOR TURKISH ADAPTATION OF DEPRESSİON ANXIETY STRESS SCALE (DASS-21) 106
A-4. PERMISSION LETTER FOR MATIRAL SATISFACTION SCALE (MSS) 107
B. INFORMED CONSENT FORM 108
C. SAMPLE ITEMS FROM TURKISH ADAPTATION OF DYADIC COPING INVENTORY (DCI) 109
D. SAMPLE ITEMS FROM TURKISH ADAPTATION OF DEPRESSION ANXIETY STRESS SCALE (DASS-21) 110
E. SAMPLE ITEMS OF MARITAL SATISFACTION SCALE (MSS) 111
F. DEMOGRAPHIC FORM 112
G. CURRICULUM VITAE 114
H. THESIS PERMISSION FORM 115

LIST OF TABLES

Table 3.1 Demographic Characteristics of the Main Study Participants 53
Table 3.2 Demographic Characteristics of the Participants of the Pilot Study..... 55
Table 3.3 Goodness of Fit Indices for Three - Factor Model of DASS-21..... 62
Table 3.4 Standardized Regression Weights and Squared Multiple Correlations of DASS-21 62
Table 3.5 Goodness of Fit Indices for Three - Factor Model of Dyadic Coping..... 66
Table 3.6 Standardized Regression Weights and Squared Multiple Correlations of DC 67
Table 3.7 Goodness of Fit Indices for Three - Factor Model of Marital Satisfaction 71
Table 3.8 Standardized Regression Weights and Squared Multiple Correlations of Marital Satisfaction 72
Table 4.1 Descriptive Statistics, Skewness, and Kurtosis Values..... 77
Table 4.2 T-tests Results Comparing Wives and Husbands on Main Study Variables 80
Table 4.3 Bivariate Correlations among the Study Variables..... 51
Table 4.4 Fit Indices APIMeM Model..... 83
Table 4.5 Actor and Partner Effects of Psychological Symptoms and Positive Dyadic Coping in Marital Satisfaction 85

LIST OF FIGURES

Figure 1.1 Conceptual Diagram of the Positive Dyadic Coping as Mediator, Psychological Symptoms as the Predictor Variable..... 25
Figure 3.1 Confirmatory Factor Analysis for Depression Anxiety Stress Scale (DASS-21) 61
Figure 3.2 Confirmatory Factor Analysis for Dyadic Coping 65
Figure 3.3 Confirmatory Factor Analysis for Marital Satisfaction 70
Figure 4.1 Structural Model Using Positive Dyadic Coping as Mediator, Psychological Symptoms as the Predictor Variable, Marital Satisfaction as Outcome Variable 86

LIST OF ABBREVIATIONS

AMOS	Analysis of Moment Structures
ANOVA	Analysis of Variance
APIMeM	Actor-Partner Interdependence Mediation Model
CFA	Confirmatory Factor Analysis
DASS-21	Depression Anxiety Stress Scale
DCI	Dyadic Coping Inventory
MSS	Marital Satisfaction Scale
SPSS	Statistical Package for Social Sciences

CHAPTER 1

INTRODUCTION

1.1. Background to the Study

Marriage is characterized as a partnership that fosters individual development across all aspects of life, promoting happiness and fulfillment within relationships (Glenn, 1991). From a different perspective, Cohen and Strong (2008) define marriage as a form of relationship where spouses collaborate emotionally, economically, and physiologically to perpetuate their lineage, anchored in social and legal foundations. Across these definitions, spouses are depicted as fulfilling each other's diverse needs, complementing one another, and addressing each other's deficiencies. However, it is an accepted fact that in cases where marriage is experienced, divorce may occur due to different reasons, as well (Berscheid, 2013). As the life cycle continues, the reasons for divorce also vary with this cycle (Stevenson, & Wolfers, J. 2007).

It is known that individuals' perceptions of the institution of marriage have changed and divorce rates have increased in recent years due to developing and changing social factors (Sheykhi, 2020). According to the data of the European Union Statistics Office, divorce rates in European Union countries doubled from 1964 to 2020. While the divorce rate was 1.6 in 27 European Union countries in 2020, this rate increased to 1.7 in 2021. In Türkiye, Türkiye Statistical Institute data on families (TUIK; 2022), the number of divorced couples was 175,779 in 2021, while it increased to 180,954 in 2022. Due to the increase in divorce rates, there is a need to understand situations related to the quality of marriage, such as spouses' psychological symptoms (i.e. depression, anxiety and stress) (see Amato & Booth, 1991; Bodenmann et al., 2007; Ferah, 2019; Tarı, 2022), coping strategies like dyadic coping (i.e., Bodenmann et al., 2006; Canbulat & Çankaya, 2014; Falconier et al., 2015; Landis et al., 2013; Taşköprü, 2013) and marital satisfaction (i.e., Eysenck, 1980; Fan & Lui, 2004).

Recent studies also show that stress is negatively related to life satisfaction (see Baykal, 2020; Dymecka et al., 2022; Kim et al., 2016) and marital satisfaction (i.e.,

Chae & Lincoln, 2010; Randall & Bodenmann, 2009; Taşköprü, 2013). Allen et al. (2013) found that stress, in addition to reducing spouses' well-being, is also a strong predictor of lack of communication, lower relationship satisfaction, and higher risk of divorce. Moreover, there is a negative relationship between job stress and marital quality for especially dual-career couples (Fallahchai et al., 2019). It has been proven by different studies that, in addition to stress, other psychological symptoms have a negative relationship with marital satisfaction and function of marriage (Güngör, 2007; Öz & Tatar, 2020; Pruchno et al., 2009; Yıldız, 2018). Whisman (2001) proved that depressive symptoms are negatively related to the quality of not only individual life but also marital functions, which is the common life of couples. Additionally, it has been found that even one person being depressed is enough for their marriage to have a negative outcome (Whisman & Uebelacker, 2009). On the other hand, it has been argued that anxiety, like depression and stress, is a threat to the healthy functioning of marriage and marital satisfaction (Tarı, 2022; Yıldız, 2018).

In addition to the mentioned psychological symptoms, another factor related to healthy functioning of marriage was women's labour force participation (see Ruggles, 1997; South, 2001). It has been presented that there is a significant relationship with the divorce rates as a result of the difficulties encountered not only in the world, but also in Türkiye with the participation of women in the labor force (Aksu & Can, 2016; Eryurt et al., 2012). With the increase in women's employment in business life, different concepts such as dual-occupation, dual-career, dual-income, working parent and dual-career marriage have emerged. According to Rapoport & Rapoport (1969), dual-career couples are married couples working in the same or different jobs for their own careers and carrying family responsibilities in this process. The number of couples with dual-career married couples increases over time (Kundu et al., 2016). Along with this increase, it is reported that most of the dual-career married couples who lives have difficulty in balancing between work, family and personal time (Neault & Pickerell, 2005). Moreover, these couples often experience difficulties in maintaining parenthood (O'Laughlin & Bischoff, 2005), making time for each other (Gorissen, 2009), and maintaining marital ties (Henry & Parthasarathy, 2010). Some studies have reported that dual-career married

couples experience difficulties such as low job satisfaction, life satisfaction, marital satisfaction, and stress, when they cannot cope with the difficulties they face (i.e., Allen et al., 2000; Ganster & Thomas, 1995).

As stated, married couples face a number of difficulties that prevent the continuity of their marriage throughout life (Akoğlu & Küçükkaragöz, 2018). However, the coping strategies used by married individuals can also change the continuity of their relationship with their spouses, their marital satisfaction, and their coping processes with the problems they experience in their marriage (Goh et al., 2011). There are different models developed for couples to cope with the problems and stress they face. The adaptation model (Revenson, 1994) primarily deals with the harmony between the couples' individual coping styles (for example, problem solving, cognitive restructuring, emotional expression). On the other hand, the relationship-focused coping model (Coyne & Smith, 1991), the systemic processing model (Bodenmann, 1997), the developmental-contextual coping model (Berg & Uphurch, 2007) and the systemic-transactional model (STM; Bodenmann, 1995) which hypothesizes that stress experienced by one couple will also have an impact on the stress level of other partner. In addition, According to Bodenmann's (2005) systemic transactional model, dyadic stress occurs when both partners in a relationship simultaneously and directly feel the impact of stress. Studies indicate that stressors unrelated to the nature of marriage, such as economic difficulties, work-related issues, and parenting challenges, have a more significant and detrimental effect on the relationship, introducing new problems into the marriage (Neff & Karney, 2017; Randall & Bodenmann, 2009; Randall & Bodenmann, 2017).

Most crucially, the STM suggests that if partners support one another in developing healthy coping mechanisms for stress, the damaging effects of stress on intimate relationships can be minimized (Randall & Bodenmann, 2017). In short, while the adaptation model emphasizes individual coping, the systemic-transactional model emphasizes that the stress experienced by a married couple is a process that the spouses must cope with together.

Dyadic coping has also been shown to significantly predict marital satisfaction (i.e., Hilpert et al., 2016; Landis et al., 2013; Wunderer & Schneewind, 2008) and marital

quality (see Hoesni et al., 2015; Kloda et al., 2013; Umberson & Wang, 2022). In addition to these researches, positive dyadic coping in relationships is positively correlated with higher relationship quality (Bodenmann et al., 2006). Men and women and people of diverse nations all found that dyadic coping was significant for relationship happiness (Falconier et al., 2015).

This study aims to examine association between psychological symptoms and marital satisfaction via the positive dyadic coping. It has been proven that dyadic coping is associated with psychological symptoms (Cappe at al., 2021; Pruchno et al. 2009), relationship satisfaction (Genç at al., 2021; Hilpert et al., 2016; Kurt & Sanberk, 2022) and marital satisfaction (Landis et al., 2013; Wunderer & Schneewind, 2008). Despite its relationship with psychological symptoms and marital satisfaction, no study has been found in the literature as a mediator in the association between marital satisfaction and psychological symptoms. The studies on dual-career married couples are quite limited and it has been understood that there is a gap in the literature on this subject. It was found that studies on dual-career married couples were limited, and the closest study related to these variables was the study conducted by Fallahchai et al. (2019), which examined the mediating role of supportive dyadic coping in the relationship between marital quality and job stress. As a result of this study, it is understood that dyadic coping is important for increasing marital quality of dual-career married couples.

1.2. Purpose of the Study

Despite numerous studies examining the correlation between psychological symptoms and marital satisfaction, there is limited comprehensive research on the mediating role of positive dyadic coping in Türkiye. Moreover, to the knowledge of the researcher, in none of the studies on positive dyadic coping have dual-career married couples been selected as a sample group. In line with this purpose and the gap in the literature, this research aims to serve as a foundational step towards understanding the mediating role of positive dyadic coping in the association between psychological symptoms and marital satisfaction in dual-career married couples living in Türkiye.

1.3. Research Questions and Hypotheses of the Study

In accordance with the purpose of the study, the conceptual diagram of the proposed model is as reflected in Figure 1.1. According to the proposed model, the research question addressed by the study is as follows:

R.Q.1. To what extent does positive coping mediate the association between psychological symptoms and marital satisfaction in dual-career married couples?

Based on the purpose and research question, the study will test the following specific hypotheses:

Hypothesis 1 (H1): There will be a significant positive actor effect of psychological symptoms on marital satisfaction

Hypothesis 2 (H2): There will be a significant positive actor effect of positive dyadic coping on marital satisfaction.

Hypothesis 3 (H3): There will be a significant negative partner effect of psychological symptoms on marital satisfaction.

Hypothesis 4 (H4): There will be a significant positive partner effect of positive dyadic coping on marital satisfaction.

Hypothesis 5 (H5): Positive dyadic coping will mediate the relationship between psychological symptoms and marital satisfaction.

1.4. Significance of the Study

The overall purpose of this study is to investigate the mediating role of dyadic coping in the association between psychological symptoms and marital satisfaction in dual-career married couples living in Türkiye. Marriage, which has a multidimensional structure, has an important place in human life from past to present. However, due to the increase in divorce rates in recent years, many researchers have conducted studies examining the dynamics affecting marriage and other positive and negative factors thought to affect marital satisfaction (Allen et al., 2013; Chae & Lincoln, 2010; Randall & Bodenmann, 2009; Taşköprü, 2013).

When examined in the literature, it has been proven that psychological symptoms are one of the variables that negatively affect marital satisfaction (Öz & Tatar, 2020; Öztahtacı, 2017; Pruchno et al., 2009; Yıldız, 2018). On the other hand, there has been an increase in studies on dyadic coping, which positive relationship with marital satisfaction (Hilpert et al., 2016; Vedes et al., 2013; Wunderer & Schneewind, 2008). Moreover, the importance of dyadic coping in the healthy functioning of relationships is emphasized by research covering many subjects and disciplines (clinical psychology, health psychology, counseling, family science, developmental and personality psychology) (Bodenamnn et al., 2019).

Similarly, an increase is observed in the number of studies on dyadic coping in Türkiye (Aydoğan & Özbay, 2018; Genç et al., 2021; Kurt & Akbaş, 2019; Kurt & Sanberk, 2022). However, it appears that the studies were evaluated on a limited sample. Additionally, systematic-transactional model (STM) emphasizes that the stress a partner experiences during the workday can negatively affect their partner if the stressed partner cannot cope with the stress with their individual skills (Randall & Bodenmann, 2009). The number of dual-career couples is increasing rapidly both in Türkiye and in the world (Kundu et al., 2016; Neault & Pickerell, 2005). According to Türkiye Statistical Institute data on families (TUIK; 2023), the female labor force participation rate in Türkiye increased from 27 % to 36 % in 2023. The increase in women's participation in the workforce brings with it advantages such as economic prosperity in marriage, the establishment of a balance of home and child responsibilities, an increase in social relations, and an increase in the cultural level. Contrary to these advantages, studies have proven that the difficulties that dual-career couples face in striking a balance between work and family responsibilities also lead to family conflicts and divorce (Duxbury, 2003; Edwards & Rothbard, 2000; Ruggles, 1997; Schulz et al., 2004; South, 2001). In this context, spouses use individual and bilateral stress sources to cope with conflict and stress in the relationship (Bodenmann & Perrez, 1991). The supportive attitudes of spouses while coping with the stressful situations they encounter in daily life help to increase the quality of marriage by improving the feeling of being together in marriage (Lavee, 2013). Although it is known that dyadic coping has an important place in establishing the balance between work and home (Hilpert et al., 2016; Landis et al.,

2013; Wunderer & Schneewind, 2008), there is only one study in which positive dyadic coping has been investigated and dual-career married couples are sampled (Fallahchai et al., 2019). However, since there are not many studies on dyadic coping with samples containing individuals from different cultures, further research is needed to increase reliability (Johnson et al., 2016). For this reason, dual-career married couples were selected as the sample group of this study. This study, whose sample is limited to dual-career married couples, is very important in terms of expanding the literature and making it unique in Turkish literature.

In addition, dyadic coping and related structures have been tested mostly with correlational and regression analyzes to date, especially in Türkiye (Genç et al., 2021; Hilpert et al., 2016; Kurt & Sanberk, 2022). However, studies conducted in recent years have shown that the interaction between couples in close relationships has a role in affecting each other's outcome variables (Aydoğan & Özbay, 2018; Vedes et al., 2013). Since each member of the dyad affects the outcomes of the other, the Actor-Partner Interdependence Mediation Model (APIMeM), which is an extension of the Actor-Partner Interdependence Model (APIM), was used in the study. APIMeM will make a significant contribution to the literature by examining the effects of individuals' predictors and mediators on both their own outcomes (actor effects) and their partners' outcomes (partner effects). In terms of contribution to society, it is aimed to raise awareness about remedial/developmental ideas about how dual-career couples cope with stress as a couple. In light of the findings obtained after the research, dual-career married individuals are expected to have knowledge about how coping skills predict marital satisfaction and psychological symptoms. It will guide psychological counselors in developing intervention programs for dual-career married couples' positive dyadic coping skills and marital satisfaction.

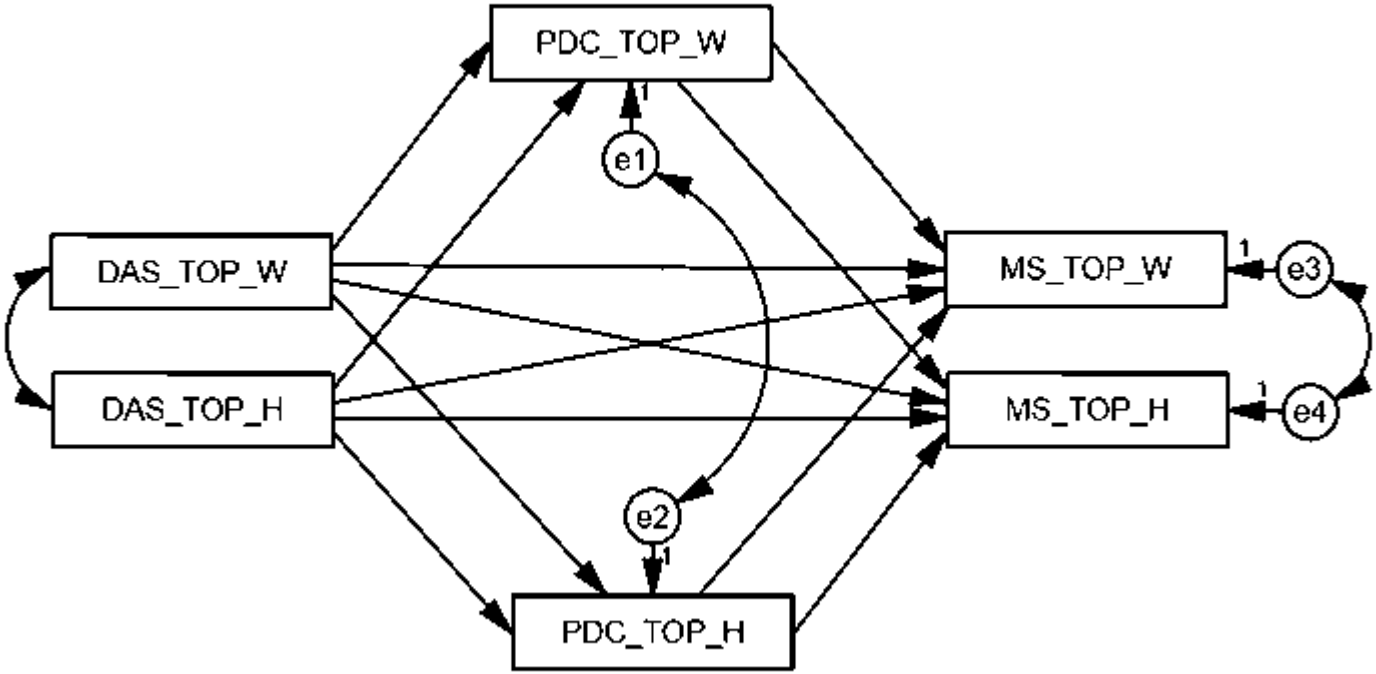

Figure 1.1 Conceptual Diagram of the Positive Dyadic Coping as Mediator, Psychological Symptoms as the Predictor Variable

Note: Note: DAS_TOP_W= Wifes' Psychological Symptoms; DAS_TOP_H= Husbands' Psychological Symptoms; PDC_TOP_W= Wifes' Positive Dyadic Coping; PDC_TOP_W= Husbands' Positive Dyadic Coping; MS_TOP_W: Wifes' Marital Satisfaction; MS_TOP_H: Husbands' Marital Satisfaction

1.5. Definition of the Terms

Dyadic Coping: Dyadic coping is defined as the process in which one partner in a relationship communicates the stress situation, he/she is experiencing to his/her partner, and the other partner perceives and interprets this transmission and the spouses react together to cope (Bodenmann, 2005).

Dual-career marriages: The dual-career marriages are defined as having both husband and wife engaged in work of personal importance, developmental progress, and careers that require high levels of commitment (Rapoport & Rapoport, 1971).

Anxiety: Anxiety is defined as a series of negative emotion-laden and uncontrollable thoughts and images (Hayes et al., 2008).

Depression: Depression is defined as being consumed by thoughts related to negativity and pessimism, as well as feelings of sadness and guilt due to past experiences (Yıldız & Yıldız, 2009).

Stress: Stress is defined as negative psychological reactions that disturb people's emotional and psychological happiness (Higgins, 2005).

Marital Satisfaction: Marital satisfaction is defined as the feeling of contentment and fulfillment that results from experiencing personal happiness in one's marriage (Hendrick & Hendrick, 1997).

CHAPTER 2

LITERATURE REVIEW

In this section, an expanded definition of dyadic coping, psychological symptoms, and marital satisfaction is presented. Specifically, the first part includes the definition and nature of dyadic coping, theories of dyadic coping, and empirical studies of dyadic coping. The second part includes the definition and nature of psychological symptoms, and empirical studies of psychological symptoms. The third part includes the definition and nature of marital satisfaction, and dual-career couple, empirical studies of marital satisfaction and dual-career couples.

2.1. Definition and Nature of Dyadic Coping

For years, studies on stress and coping strategies have focused solely on individual coping strategies rather than the mutually influential processes inherent in relational contexts (Lazarus & Folkman, 1984). In the past twenty years, academics have increasingly embraced a systemic viewpoint, transitioning from perceiving stressors as solely impacting one partner to recognizing their impact on both individuals. Based on Lazarus and Folkman's (1984) individual-oriented theory of stress and coping the systemic-transactional model (STM; Bodenmann, 2005) has become a widely recognized theory of stress and coping in couples and families. A fundamental assumption of STM is the interdependence between romantic partners, suggesting that the stress experienced by one partner inevitably impacts the other partner through processes of stress spillover (Bodenmann et al., 2007) and crossover (Neff & Karney, 2007). When individuals face stressors and lack sufficient coping resources, the distress they experience can manifest in behaviors in other areas of life, potentially triggering additional stressful events and further stress (Cooper et al., 2019). This phenomenon is referred to as stress spillover (Bolger, et al., 1989). Stress crossover, on the other hand, involves the transfer of stress between individuals (Bakker et al., 2009; Westman, 2001). This crossover of stress can occur bidirectionally, meaning that stress experienced outside of the relationship by an individual may impact their romantic partner, while stress experienced within the

relationship may affect individuals outside of the romantic partnership, such as coworkers (Westman, 2001).

Research has proven that the stress experienced by an individual has effects on both spouses and that the stress experienced by couples is an important determinant of the quality of marriage (Bodenmann, 2005; Bodenmann et al., 2006; O'Brien et al., 2009). Researchers have shown interest in exploring stress spillover and crossover processes within couples exposed to daily external stressors and how couples effectively cope with these challenges (Falconier et al., 2015; Neff & Karney, 2007; Randall & Bodenmann, 2017). Over the last decade, the field has expanded its focus to include couples dealing with critical life events or severe illnesses (e.g., Badr et al., 2010; Cooper et al., 2019; Revenson & Lepore, 2012; Rottmann et al., 2015) as well as mental disorders (Bodenmann & Randall, 2013).

Moreover, while researchers focused on the individual effects of stress before the 1990s, research on stress since the 1990s has determined that it significantly affects sleep, marital communication, and marital satisfaction between couples (Bodenmann et al., 2006). The first study to investigate the crossover effect of job stress on marital satisfaction in dual-career couples in Finland found that work-family conflict did not have an impact on marital satisfaction due to the common support provided by partners due to the job stress faced by one partner (Mauno & Kinnunen, 1999). As a result of understanding that the stress experienced by one spouse affects the other spouse and the dynamics of the marriage, dyadic coping was introduced to incorporate systemic couple interactions into individually focused models of stress and coping developed in the 1990s, with the idea that stressors crucial to marital quality are a process that couples will engage in together (Falconier et al., 2015). As a result, they changed their view that stressors only affected one partner to directly or indirectly affecting both (Nef & Karney, 2007). In this regard, the coping responses of partners to each other's stress arising from external circumstances have been termed as dyadic coping (DC) (Neff & Karney, 2007).

Falconier et al. (2015) define dyadic coping as the whole of processes that include individual strategies to help the other partner cope with stress and the partners' common coping strategies. Dyadic coping refers to the way spouses share and react

to stressful situations, whether through direct or indirect communication, spoken or unspoken, wherein one spouse communicates stress and the other responds and engages in managing that stress (Bodenmann, 1997). From the same point of view, Falconier and Kuhn (2019) argued that dyadic coping involves support at both the dyadic and individual levels, including supportive interaction processes between partners. That is, the stress experienced by couples is viewed as a dyadic process, rather than an individual process (Lyons et al., 1998). As a result, some theorists have put forward a perspective on how couples cope with stress, as well as personal coping techniques (Bodenmann, 1997). This perception is that coping with stress in couples is interpersonal rather than individual, making the process of coping with stress a joint responsibility of both partners (Bodenmann, 2005).

While in 1992 only four publications mentioned dyadic coping, in 2018, 1,347 publications mentioned the different coping methods, and over time, it was revealed that dyadic coping became critical for the couple's relationship satisfaction, communication, sexuality, commitment, and relationship dissolution (Rusu et al., 2019). Recent studies also show that stress is negatively related to life satisfaction (see Baykal, 2020; Dymecka et al., 2022; Kim et al., 2016) and marital satisfaction (i.e., Chae & Lincoln, 2010; Randall & Bodenmann, 2009; Taşköprü, 2013). In addition to this, there was a negative correlation between job stress and marital quality for dual-career couples (Fallahchai et al., 2019). The coping strategies used by married individuals can also change their relationships with their spouses, their marital satisfaction and coping with the problems they experience in their marriage (Goh et al., 2011). Furthermore, dyadic coping significantly predicts marital satisfaction (i.e., Hilpert et al., 2016; Landis et al., 2013; Wunderer & Schneewind, 2008) and marital quality (see Hoesni et al., 2015; Kloda et al., 2013; Umberson & Wang, 2022). In addition to these studies, dyadic coping in relationships is adversely correlated with divorce risk and positively correlated with higher relationship quality (Bodenmann et al., 2006). Researchers have emphasized the importance of stress spillover and crossover processes in couples exposed to daily external stress factors for the marriage process. The literature emphasizes the importance of dyadic coping in order to effectively cope with the difficulties faced by couples.

2.1.1. Theories of Dyadic Coping

Several dyadic models of coping emphasize the shared experience of coping between partners (Berg & Upchurch, 2007; Bodenmann, 2005; Coyne & Smith, 1991). Subsequently, Revenson (1994) introduced the concept of "congruence", emphasizing how well partners' coping responses align and offer support, and proposed that this common support can result in positive psychosocial outcomes. Essentially, the adaptation model (Michelson, 1976; Revenson, 1994) focuses on the congruence between the degree to which individuals' needs in their respective domains are fulfilled and the coping styles of their partners. Rather than focusing on partners' efforts to support each other's stressful processes, this model focuses on the harmony between the individual coping strategies of both partners.

Dyadic coping related to illness has been the primary focus of the congruence model (Kraemer et al., 2011; Pakenham, 1998). Relationship-focused coping model (Coyne & Smith 1991), which is another model of dyadic coping, emphasizes cognitive and behavioral responses to manage and maintain stress in the social context during stressful experiences. RFM (relationship-focused model) did not prioritize individual stress management strategies of each partner, but rather emphasized the actions taken by each partner to assist the other in coping with stressful processes (Falconier & Khun, 2019). In terms of this theory, successful coping emphasizes maintaining and protecting social relationships in situations of interpersonal stress (O'Brien and DeLongis 1996). In addition, relationship-focused coping (Revenson & Lepore, 2012) advocates that a person requires cognitive and behavioral efforts to manage social relationships during stressful periods, and emphasizes meeting the emotional needs of partners in this process. RFM has frequently been utilized in studies examining how couples cope with medical conditions such as cancer, diabetes, and Alzheimer’s disease (Hinnen et al., 2008; Kramer, 1993; Schokker et al., 2010).

Another model for dyadic coping, the developmental-contextual coping model (DCCM), was devised by Berg and Upchurch (2007) to elucidate how couples jointly navigate and cope with chronic illness. DCCM (Berg & Upchurch, 2007) examines the impact of spouses' stress coping processes on relationship structure and

contextual issues such as culture and environment. While the model incorporates developmental and contextual aspects, research on the DCCM has primarily concentrated on demographic variables such as age, gender, and length of the relationship (Falconier & Khun, 2019).

2.1.1.1. Systemic-Transactional Model

This study will be based on the systemic-transactional model (STM), which supports dyadic coping and rationalization regarding romantic relationship dynamics. (Bodenmann, 1995). Similar to other dyadic models, this model posits that the stress experiences of couples start to influence each other, and one partner's stress can become the other partner's stress as well (Randall & Bodenmann, 2009; Revenson & Lepore, 2012). This model focuses specifically on the role of reciprocity between partners, where one partner expands the skills and strategies of the other partner and expands the resources of the other partner by offering additional options through strategies for coping with major life events. (Randall & Bodenmann, 2017). STM primarily concentrates on investigating coping mechanisms in couples facing everyday challenges or minor chronic stressors (Falconier & Khun, 2019).

The STM process begins when one or both partners verbally or non-verbally transfer the stress state (Bodenmann et al., 2016). These stress signals trigger the other partner's perception, evaluation, goal processes, and dyadic coping responses. In the transmission of these signals, the direct or indirect participation of both spouses in this process, general coping strategies, motivations, and timing of indirect and direct participation are important (Bodenmann et al., 2016). Depending on these variables, the non-stressed partner may have difficulty meeting the stressed partner's needs, may ignore or discount the stressed partner's stress, may transfer his or her stress, or may engage in dyadic coping (Bodenmann, 1997).

The partner's response will differ depending on the type of positive and negative dyadic coping (Bodenmann et al., 2016). Positive forms of dyadic coping (DC) that benefit both partners and their relationships include common, supportive, and delegated dyadic coping (Bodenmann, 1997). In the *common dyadic coping* process, partners engage in common dyadic coping by discussing stress openly and

understanding its implications for each other, attempting to redefine or reframe the stress collaboratively, seeking additional information together, and making concerted efforts to alleviate tension, physical closeness, and intimacy (Bodenmann, 2000). *Supportive dyadic coping* is defined as one partner's efforts to aid the other partner in coping by employing problem-focused strategies (such as assisting in finding solutions) or emotion-focused strategies (such as empathy) (Bodenmann, 2000). Lastly, *delegated dyadic coping* is defined as making an effort to provide support to the stressed partner by taking over his/her duties and responsibilities (Falconier et al., 2015). Regardless of gender, positive dyadic coping has been shown to contribute to relationship satisfaction in significantly opposite directions and is stronger predictor of relationship satisfaction than individual coping (Falconier et al., 2015). Studies conducted in different cultures such as Japan, America, and Canada suggest that there is a positive relationship between relationship satisfaction and supportive dyadic coping, and that relationship satisfaction is achieved and relationship quality is increased with positive dyadic coping (Levesque et al., 2014; Randall et al., 2015; Yokotani & Kurosawa, 2015). Additionally, supportive dyadic coping has been proven to be associated with effective conflict resolution (e.g., Ledermann et al., 2010; Vedes et al., 2013) and relationship continuity (Bodenmann & Cina, 2006). In addition, Fallahchai et al. (2019) proved that there is a negative relationship between job stress and marital quality, but supportive and common dyadic coping act as moderators, reducing the impact of stress on dual-career couples and subsequently improving the quality of their marriage.

On the other hand, negative dyadic coping occurs when a partner fails to provide support voluntarily, encompassing *hostile* (partners unwilling to assist each other, ridiculing stressful situations), *ambivalent* (partners reluctantly supporting each other), and *superficial* (partners offering support without empathy or understanding of feelings) behaviors (Bodenmann, 1997). This situation arises when a couple struggles to achieve balance in coping with stress, the spouse does not receive adequate support from their partner during times of stress, or the motivational support is lacking. In the study conducted by Papp and Witt (2010), it was found that there was a negative relationship between hostile/ambivalent DC and relationship satisfaction in American couples.

It has been proven that there is a significant positive relationship between the coping strategies used by married individuals and the support they provide to each other and their marital satisfaction (Goh et al., 2011; Hilpert et al., 2016; Landis et al., 2013; Wunderer & Schneewind, 2008) and marital quality (Hoesni et al., 2015; Kloda et al., 2013). In addition to these studies, dyadic coping in relationships has been found to be negatively associated with divorce risk and positively associated with higher relationship quality (Bodenmann et al., 2006).

As a result, a spouse's stress affects not only that spouse's life but also the lives and marital processes of both spouses, and it has been argued that spouses should provide support to each other in order to cope with this stressful process and that dyadic coping strategies as a couple are an important predictor of marital satisfaction.

2.1.2. Empirical Studies of Dyadic Coping

Studies in the literature have generally found that dyadic coping is related to the ability to respond empathically (Falconier et al., 2015). As a result, except for Aydoğan and Özbay's (2018) study, it has been argued dyadic coping is necessary for marital satisfaction or relationship satisfaction (Hilpert et al., 2016; Kurt and Sanberk, 2022; Rusu et al., 2019).

First study is a comprehensive study focusing on whether dyadic coping varies according to cultural differences (Hilpert et al., 2016). To explore the impact of cultural factors, a study was conducted using a sample of married individuals from 35 different countries (n = 7973). The study aimed to assess whether the positive association between positive dyadic coping and relationship satisfaction varied across these countries and if gender played a role in this relationship. The findings revealed that positive dyadic coping had a significant and positive predictive role in marital satisfaction. As Hilpert et al. (2016) stated, on average, couples in countries with higher mean positive dyadic coping scores tended to report greater satisfaction with their marriages compared to those in countries where individuals reported lower scores in this regard.

The findings regarding dyadic coping in Türkiye were consistent with the international literature, except one research. Aydoğan and Özbay (2018) conducted a study to examine how dyadic coping mediates the relationship between relational resilience and parenting stress in married couples. Results revealed that dyadic coping did not mediate the association between relational resilience and parenting stress.

Except for the study conducted by Aydoğan and Özbay (2018), other studies are consistent with the international literature. This study (Kurt & Sanberk, 2022), conducted with 487 married individuals living in Türkiye, proposes to examine the relationship between married individuals' levels of exposure to COVID-19 and dyadic coping and problem solving in marriage. As a result of the study, it has been proven that if the couple acquires the ability to jointly cope with stress and solve problems, they can show more resilience in the face of difficult life events.

While the study conducted by Kurt and Sanberk (2022) emphasizes the importance of dyadic coping in the new lifestyle for the adaptation period, the study conducted by Kurt and Akbaş (2019) serves a different purpose. The study by Kurt and Akbaş (2019) aimed to explore how dyadic coping influences the relationship between parenting stress and marital quality. Participants consist of 803 married individuals. Additionally, the common model revealed that the relationship between parenting stress and marital quality was partially mediated by emotion- and problem-focused common dyadic coping.

Another study related to dyadic coping covers a similar time period as the COVID-19 period to the study conducted by Kurt and Sanberk (2022), but the purpose and sample of this study (Genç et al., 2021) differ. This study by Genç et al. (2021) aims to understand how distress caused by COVID-19 is related to relationship satisfaction and to investigate the mediating role of dyadic coping in Türkiye. The research involved 233 participants who identified themselves as being in a romantic relationship. Results indicated that dyadic coping skills were positively associated with couples' relationship satisfaction. Moreover, a significant indirect effect was

observed, indicating that perceived dyadic coping mediated the relationship between COVID-19distress and relationship satisfaction for both men and women.

Findings (Genç et al., 2021; Kurt & Akbaş, 2019; Kurt & Sanberk, 2022) regarding dyadic coping in Türkiye are consistent with the international literature, but a limited number of studies have been found. When the studies related to these variables in Türkiye are examined, to the knowledge of the researcher, there are no studies conducted with dual-career married couples. Therefore, this study is very important as it expands the literature.

2.2. Definition and Nature of Psychological Symptoms

As per the Diagnostic and Statistical Manual of Mental Disorders (DSM-5), utilized for categorizing psychiatric conditions, psychological issues are characterized by notable distress in an individual's emotions, thoughts, and behaviors, leading to impairment in their domestic, occupational (academic), and social spheres (APA, 2013). Stress, depression, and anxiety are frequently cited symptoms in various studies (Lupo & Strous, 2011; Lyubomirsky et al., 2003; Yusoff et al., 2013). In research in the USA, it was discovered that anxiety symptoms surged three times, and depressive symptoms escalated fourfold during the second quarter of 2020 in contrast to the corresponding period of the prior year (Czeisler et al., 2020). Similarly, in an Australian study, 78% of respondents noted a deterioration in their mental well-being during the epidemic, citing heightened levels of depression, anxiety, and stress (Newby et al., 2020). In Türkiye, it has caused an increase in depression, anxiety, and stress as a result of social isolation, which is one of the measures taken during the pandemic (Aslan et al., 2020; Bashir et al., 2020; Karataş, 2020; Örgev et al., 2020).

As can be seen, the number of studies on depression, anxiety, and stress is increasing today, and depression, anxiety, and stress are the most frequently focused psychological symptoms (Taghva et al., 2014). In addition, while anxiety and depression are commonly perceived as separate conditions, they frequently appear together in individuals with mood disorders (Sanderson et al., 1990). Additionally, assessments aimed at gauging these states often show strong correlations, indicating

an interconnectedness between two symptoms (Clark & Watson, 1991). In light of this information, this study aimed to study psychological symptoms of stress, anxiety, and depression.

2.2.1. Depression

Depression is a process that affects not only a person's social environment but also his/her professional life. In another definition, depression, characterized by a negative outlook, disinterest in daily activities, reduced functionality, eating disturbances, and additional symptoms, falls under the category of mood disorders that display features of anxiety (Köroğlu, 2006). Depression poses a major obstacle to an individual's ability to fulfill routines. In a similar definition, depression, as a psychological symptom, emerges when enthusiasm for life diminish, leading to profound sadness and distress. It involves being consumed by thoughts associated with negativity and pessimism, alongside feelings of sorrow and guilt related to past experiences (Yıldız & Yıldız, 2009). The state of pessimism affects not only the thinking process about the past but also the thoughts about the future.

Beck's (1979) cognitive theory can be delineated into two primary components of depression. The first revolves around an individual's negative perceptions concerning themselves, their future, and the world—essentially the structural aspect of the theory. The second component encompasses information processing strategies, incorporating logical fallacies and distortions in thinking patterns. Beck's foundational concept proposed that individuals experiencing depression tend to develop negative schemas—essentially cognitive frameworks or patterns—as a consequence of negative events and situations they encounter during childhood or earlier stages of life. The negative thoughts stemming from these schemas create a cycle, where negative thoughts reinforce negative emotions, and vice versa, perpetuating the experience of depression. In conclusion, Beck considers other symptoms and signs of depressive syndrome to be the consequences of a negative cognitive pattern (Beck, 1979).

Based on Evren and Ögel's (2003) perspective, depression manifests through various symptoms such as profound sadness, emotional thoughts and movements, stagnation,

feelings of worthlessness and guilt, fatigue, decreased attention and concentration, reluctance, diminished motivation, pessimistic feelings and thoughts, slowness in physiological movements. These symptoms collectively paint a picture of depression, impacting various aspects of an individual's life and functioning. Briefly, depression doesn't just impact individuals' emotions it also influences how they engage in daily activities and their relationships in social settings, and even manifests in physical aspects (Burns, 2019). It has been proven by Whisman (2001) that marital quality has a negative relationship with depressive symptoms. In the light of these theories and definitions, it is seen that depression symptoms negatively affect people's work and family lives, negatively affect their marital satisfaction, cause them to adapt to their routines and experience pessimistic feelings.

2.2.2. Anxiety

Anxiety is identified as one of the psychological disorders triggered by the intricacy of an individual's roles and diverse responsibilities (Schmid et al., 2011). Anxiety encompasses additional assessments following the activation of fear perception. It's closely tied to a sense of lack of control over both present and future threats (Barlow, 2000). Although anxiety plays a crucial role in life preservation when experienced beyond a certain threshold, it starts to negatively impact the individual and can be the cause of certain psychological issues (Eşel, 2003).

The general model of anxiety illustrates the key components of anxious feelings and physiology, anxious thoughts, and anxious behaviors. These elements interact with each other, fostering vicious cycles of anxiety that sustain its continuation (Sanders & Wills, 2003). As a result, anxiety can be defined as a psychological symptom experienced against losing control when faced with a danger created by uncertainty, and when experienced intensely, it disrupts the person's routines, as in depression. In addition, since each situation affects each individual at different levels, the perception of the situation may determine the level of anxiety.

2.2.3. Stress

The term "stress," derived from the Latin "estrica" and the French "estrece," was employed in 17th-century Europe to denote catastrophe, hardship, distress, grief, and

sorrow (Altuntaş, 2003). Stress is often defined as a condition that disrupts or brings discomfort to an individual, affecting them both psychologically and physically (Ünsal, 2018). From a different viewpoint, stress is characterized as an emotional, physical, or cognitive response stemming from an individual's reaction to environmental pressures, conflicts, tensions, and similar stimuli (Newbury-Birch & Kamali, 2001). In a different definition, individuals strive to adapt to these life events, and stress is defined as the exertion an individual puts forth beyond their physical and psychological limits to grapple with the adaptation process stemming from their physical and social environment (Budak, 2021). Various approaches employ different terminology and expressions to define stress.

According to stress, appraisal, and coping theory (Lazarus & Folkman, 1984), stress arises from "person-environment interaction." Rather than being an inherent feature of either the individual or the environment, stress is seen as a specific relationship between the person and the environment, known as person-environment interaction, and includes elements that the individual considers important for his or her well-being (Sivam & Chang, 2016). Stress occurs when the demands of these elements exceed the individual's available coping resources or abilities to manage them effectively (Folkman & Lazarus, 1986).

Another theory that defines stress is the conservation of resources theory (Hobfoll, 1989). According to this theory, individuals strive to access, protect and increase the resources they value, and when these resources are threatened, stress begins to occur as a result of not being able to compensate for the lost resources. According to this approach, stress is an emotion that occurs when an individual encounters the threat of diminishing resources.

Stress is often linked to how effectively or ineffectively individuals handle life changes in their home, family, workplace, or social environment. According to Stranks (2005), causes of stress include environmental stress factors such as extreme temperatures, inadequate lighting, noise, vibration, and the presence of airborne pollutants such as dust, smoke, and gases. Additionally, occupational stressors emphasize that they are associated with overwork or underwork, conflicting job demands, inadequate supervision, long working hours, and the interaction between

work and family responsibilities. Finally, Social stressors include family life, marital relationships, and grief-related stressors.

Judge and Ilies' (2004) research found that how employees feel about their work affects their mood at home. In the light of these explanation, stress can be defined as an external reaction of a person as a result of pressure and threats from the environment or the effort made to adapt to a new life. Recently, with the increase in the number of dual-career married couples, an increase has been observed in studies on the stress experienced by the interaction between work and family responsibilities (Jamadin, et al., 2015). It reveals that the reason for this is that dual-career married couples experience difficulties and role ambiguity in balancing work and family roles around the world (Krishnan et al., 2020). It is also argued that the stress experienced in business life spreads to married life and poses an obstacle to the continuity of marriage (Henry & Parthasarathy, 2010).

2.2.4. Empirical Studies of Psychological Symptoms

There are many studies in the literature between psychological symptoms and marital satisfaction. As a result of the literature review, it was found that there was a negative relationship between psychological symptoms and marital satisfaction. It has been observed that studies examining the association between psychological symptoms and marital satisfaction generally focus on depression, anxiety, and stress, which are the most common psychological symptoms (Taghva et al., 2014), and studies related to anxiety are quite limited.

The first study examined the association between levels of anxiety and depression and marital satisfaction (Whisman et al., 2004). The sample of the study consisted of 779 couples. The results of the study showed that marital satisfaction was predicted by the individual's own anxiety and depression level (e.g., actor effects) and only by his or her spouse's depression level (e.g., partner effects).

Unlike the sample group of Whisman et al.'s (2004) study, Pruchno et al. (2009) investigated the association between depressive symptoms and marital satisfaction in a sample of 315 patients diagnosed with kidney disease and their spouses (n = 730). The findings revealed that the average and changing levels of depressive symptoms

in both patients and their spouses were linked to their perception of marital satisfaction. Notably, the study highlighted significant effects between partners, indicating that both the consistent average levels and the changing patterns of depressive symptoms in one partner influenced the marital satisfaction of the patient.

The findings regarding the psychological symptoms in Türkiye were consistent with the international literature. Güngör (2007) aimed to construct a model to investigate the direct and indirect relationships among various factors, including readiness for marriage, self-efficacy in marriage, psychological symptoms, and personality traits such as active planning and openness to development, emotional inconsistency, self-control, and agreeableness, which collectively contribute to marital satisfaction. The study involved 620 women and 404 married men as participants. Results indicated that coping styles such as active planning, psychological symptoms, readiness for marriage, and self-efficacy in marriage exerted a direct influence on marital satisfaction.

Another study conducted in Türkiye examining the association between psychological symptoms and marital satisfaction was conducted by Öztahtacı (2017) to examine the association between adults' attachment styles and the depression levels of people who are thought to affect marital satisfaction. The sample consisted of 340 married women. According to the findings of this research, a negative and significant relationship was found between depression and marital satisfaction.

In another study conducted by Yıldız (2018), the primary aim was to explore the correlation between marital satisfaction, early maladaptive schemas, depression, and anxiety symptoms. Additionally, the study aimed to investigate how perceived social support plays a mediating role in the relationship between marital satisfaction and depression/anxiety. The research involved 150 married individuals, comprising 106 women and 44 men. As a result, the study highlighted that those individuals with lower marital satisfaction had their levels of depression and anxiety explained by early maladaptive schemas. This suggests that these schemas played a significant role in understanding the depression and anxiety levels among individuals experiencing lower marital satisfaction.

What makes the study conducted by Öz and Tatar (2020) in Türkiye different from other studies is that its sample is dual. In the research conducted by Öz and Tatar (2020), the primary objective was to explore how marriage duration acts as a mediator in predicting marital satisfaction concerning couples' levels of depression, happiness, and psychological well-being. The study encompassed 404 married couples, comprising 202 women and 202 men aged between 19 and 67 years. Their findings indicated a weak and negative correlation between depression and marital satisfaction. This suggests that as depression levels increased, marital satisfaction tended to decrease, albeit with a relatively mild association.

The findings indicated that an increase in marital satisfaction corresponded to a decrease in the level of depression, establishing a negative relationship between these variables. However, upon examining the mediating role of perceived social support, it was noted that while higher marital satisfaction was associated with lower depression levels, increased perceived social support was linked to higher levels of depression. When the studies conducted to examine the association between depression and other variables to be used in the study (positive dyadic coping, marital satisfaction) were examined, to the knowledge of the researcher, no studies were found whose samples included dual-career married couples. It was determined in the literature review that depression needs to be expanded in this regard.

2.3. Definition and Nature of Marital Satisfaction

Many definitions of marriage have been made by different perspectives (Al-Darmaki et al., 2014; Fellizer, 2017; Hayward & Zhang, 2006; Larson & Holman, 1994; Murphy, 2011; Waite & Gallagher, 2001). Marriage holds a pivotal role as the primary foundation for creating familial bonds and raising future generations, thus being regarded as the most crucial and fundamental human relationship (Larson & Holman, 1994; Murphy, 2011). Waite and Gallagher (2001) depicted marriage as a process wherein two individuals who love each other externalize their emotions from their realm and transform them into a shared social reality. According to Al-Darmaki et al.'s (2014) point of view, marriage represents a legal, emotional, and societal connection between two people, aiming to set common objectives, collaborate financially, and participate in raising children. According to Gülerce (1996), the

objective for individuals entering into marriage is to establish an environment that fulfills each other's physiological, psychological, and social needs.

In addition, meeting the psychological, physiological, and social needs during the marriage process plays a direct role in influencing the levels of marital satisfaction among spouses (Gökmen, 2001). Various studies (Dilmaç & Sakarya, 2020; Karaaslan et al., 2021; White, 1994) have consistently shown that married individuals whose needs are met tend to live happier lives overall. On the contrary, when happiness, expectations, and harmony between spouses are not achieved in marriage, relationship satisfaction decreases and people become unhappy in their relationships (Özgüven, 2000; Yıldız & Baytemir, 2016). In other words, failure to meet mutual needs and mismatch of expectations during the marriage process negatively affects marital satisfaction. There are many definitions related to marital satisfaction, which is an important concept for the continuity of marriage. Hendrick and Hendrick (1997) describe marital satisfaction as the sense of contentment and fulfillment within one's marriage, derived from experiencing personal happiness. According to Spanier and Lewis (1980), marital satisfaction encompasses individuals' overall perception regarding the fulfillment of their needs within the context of their marital relationship. Baumeister (2007) suggested that marital satisfaction involves couples reassessing the advantages and drawbacks of their marriages, ultimately determining their level of contentment within the relationship. Çağ (2011) provided an expansive definition of marital satisfaction, highlighting it as a psychological contentment stemming from both personal aspects (communication patterns, love, sexual fulfillment, etc.) and environmental factors (equity in the relationship, sharing joys and difficulties, etc.).

Marital satisfaction has been examined by many theoretical approaches. The first of these is cognitive theory. According to cognitive theory, negative biases in the thinking process, flawed thoughts, and illogical conclusions can trigger distressing emotions in individuals (Hackney & Cormier, 2005). When discussing issues and conflicts within marital relationships, mental processes like spouses' beliefs about their relationship, cognitive distortions, and automatic thoughts may contribute to the persistence of problems within the relationship (Bradbury et al., 2000; Woodward et

al., 2001). The theory suggests that beliefs developed within the marriage significantly impact marital satisfaction (Bradbury & Fincham, 1990). Moreover, problem-solving approaches and communication skills, often emphasized in the cognitive model, influence marital satisfaction (Metis & Cupach, 1990). Moller et al. (2001) concluded that the intensity of cognitive distortions among spouses predicts the level of conflict experienced within the marriage. Essentially, this theory underscores the significance of existing beliefs, cognitive distortions, and automatic thoughts as crucial factors influencing marital satisfaction.

According to dynamic goal theory (Li & Fung, 2011), marital satisfaction is the overall personal evaluation of three basic goals (friendship, personal development, and instrumental goals) that people aim to achieve within marriage. Friendship goals are related to the need for belonging and connection in marital relationships; Personal development goals, with a desire for self-improvement and fulfillment in marriage by leveraging social connections for personal growth; Instrumental goals are associated with practical aspects of marriage, such as sharing household responsibilities such as housework, finances, and child care (Li & Fung, 2011). Achieving these practical goals significantly impacts marital dynamics.

In the context of marital satisfaction, attribution theory is another relevant framework. This theory addresses causal attributions, which focus on how a partner explains an event, and responsibility attributions, which refer to who is responsible for the event or response to the event (Fincham & Bradbury, 1992). Research has consistently demonstrated a strong association between causal and responsibility attributions and levels of marital satisfaction (Fincham & Bradbury, 1987). Additionally, studies have revealed a significant negative correlation between negative attributions made by spouses and their overall marital contentment (Dowd et al., 2005). Heider's study (1958) elucidated that spouses' attributions regarding events within their marriage correlated with their level of marital satisfaction. This analysis underscores that, in comparison to happily married partners, those undergoing marital distress tend to amplify the impact of negative events through causal attributions while downplaying the significance of positive events. Distressed spouses also tend to perceive their partners as driven by self-interest and displaying

negative intent. Finally, in research centered on responsibility attributions, it's indicated that in distressed relationships, spouses frequently interpret their partners' actions as motivated by self-interest and displaying negative intent (Bradbury & Fincham, 1990).

In summary, when different theories and definitions are examined in the context of marital satisfaction, the focus is mostly on the extent to which individuals find answers to their expectations regarding marriage, even though negative thoughts and prejudices affect this process. While satisfying one's expectations and needs increases a person's likelihood of experiencing marital satisfaction, on the contrary, it poses an obstacle to marital satisfaction.

2.3.1. Nature of Dual-Career Marriages

"Dual-career spouses" as a concept was introduced in the literature with the article "The dual-career family" penned by Rapoport and Rapoport in 1969 (Rapoport & Rapoport, 1969). The increasing demand for labor resulting from the shift of production to factories and economic growth has facilitated greater participation of women in the workforce (Ak, 2019). A significant event that influenced women's participation in the workforce following the industrial revolution was World War II. The war and the subsequent shifts in labor supply and demand in the market led to increased participation of women in the labor force (Gençtürk, 2022). When the historical process is examined in all societies, it is seen that the role of women was to deal with housework, to stay out of paid working life, and to experience a gender-based role separation, while the social and economic changes require women to take an active part in working life (Gençtürk, 2022). Especially for developing countries, it has become a necessity in today's world for women to participate in working life and make the necessary contribution to the family economy (Aksoy et al., 2019). Therefore, women's participation in the workforce has a great role in the development of countries and in solving important problems such as unemployment and poverty (Karabıyık, 2012).

With the increase in women's employment in business life, different concepts have emerged in terms of dual-occupation, dual-career, dual-income, working parents,

and dual-career marriage (Bhowon, 2013). Rapoport and Rapoport (1971) describe the dual-career family as having both husband and wife engaged in work of personal importance, developmental progress, and careers that require high levels of commitment. This family structure endeavors to balance professional pursuits with maintaining a family life (Bebbington, 1973). Parker et al. (1981) point of view, a dual-career couple can be described as a partnership where both individuals pursue distinct career paths while also maintaining a devoted romantic relationship.

Just as every situation has its advantages and disadvantages, there may also be some facilitating factors and challenging factors brought about by a dual-career lifestyle. Positive and negative results may develop by affecting the stress in business life or the problems in home life affecting business life in terms of motivation, performance, and effectiveness (Soysal, 2009). The economic relief experienced by both couples working is the primary advantage (Green & Zenisek, 1983). Another advantage is that responsibility for housework or child care is considered to belong not only to women but also to men (Gorissen, 2009). This provides the opportunity to share responsibility equally. In addition to these advantages, dual-career lifestyle is an opportunity for women to increase their social networks (Green & Zenisek, 1983), support their personal development (Hall & Hall, 1979), and positively affect their well-being. Although dual-career couples frequently express satisfaction in their marriages, the demands of maintaining a dual-career lifestyle are often associated with challenges such as role strain, stress, conflicting demands, and work overload (Blumenstein & Swartz, 1983).

In addition to the positive outcomes associated with dual-career, there are also challenges in the marital process. Difficulties faced by dual-career couples in balancing between work and family responsibilities contribute to family conflict (Duxbury, 2003; Edwards & Rothbard, 2000; Schulz et al., 2004). These couples often encounter challenges in meeting domestic obligations (Neault & Pickerell, 2005), navigating parenthood (O'Laughlin & Bischoff, 2005), allocating time for each other (Gorissen, 2009), and sustaining their marital bond (Henry & Parthasarathy, 2010). Furthermore, couples grappling with these obstacles may experience decreased job satisfaction, and career success (Kossek & Ozeki, 1998),

reduced marital satisfaction (Landis et al., 2013), increased stress (Landis et al., 2013), and diminished life satisfaction (Bartley et al., 2007). Nasir and Amir (2010) support the spillover theory, which states that there is a similarity between what happens in the work environment and what happens in the family environment, and that happiness at work leads to happiness at home. Judge and Ilies' (2004) research found that how employees feel about their work affects their mood at home. It has also been argued that the mood at work spreads beyond the work area and affects the mood at home, so it is possible and probable that a person's job satisfaction is related to marital satisfaction.

It has been mentioned that the dual-career married structure has advantages such as economic relief, equal distribution of housework and child care responsibilities, expansion of the social circle, and support for personal development. Contrary to the advantages, studies have shown that couples face difficulties such as spreading job stress into the family, conflicting demands, fulfilling their domestic obligations, decreasing the time spent with each other, and decreasing marital satisfaction. However, the importance of effective communication skills, the support that spouses provide to each other, and dyadic coping have been proven to cope with such difficulties, which in the end tend to result in higher marital satisfaction (Falconier et al., 2015; Landis et al., 2013; Ray, 1990; Wunderer & Schneewind, 2008).

2.3.2. Empirical Studies of Marital Satisfaction

As a result of the literature review on marital satisfaction, studies were found proving that couples' supportive behavior towards each other in the face of difficulties is a dyadic coping method that positively affects relationship satisfaction (Falconier et al., 2015; Landis et al., 2013; Ray, 1990; Wunderer & Schneewind, 2008). These studies are quite limited in Türkiye. It has also been found that job stress negatively affects marital satisfaction (Kazmi et al., 2017). However, to the knowledge of the researcher, no study has been found in the Turkish literature that examines the association between psychological symptoms, positive dyadic coping, and marital satisfaction with dual-career married couples.

In the research by Wunderer and Schneewind (2008) involving 663 married couples in Germany, the investigation aimed to explore the mediating role of dyadic coping in the relationship between marital standards and marital satisfaction. The study uncovered that couples experienced higher levels of marital satisfaction due to their engagement in dyadic coping mechanisms. Specifically, supportive behaviors exhibited during stressful circumstances—deemed an adaptive process—played a mediating role between enduring vulnerabilities (referred to as standards) and marital satisfaction. Moreover, the findings suggested that wives' marital satisfaction was more reliant on the support they received from their husbands compared to the impact of support experienced by husbands from their wives.

A study similar to the aim of the study conducted by Wunderer and Schneewind (2008) was conducted by Landis et al. (2013). The study explores how coping behavior impacts marital satisfaction among older couples (n = 132). Dyadic coping strategies, crucial in managing daily stress within marriage, showed a significant correlation with marital satisfaction. The results revealed that spouses' subjective views of their partners' supportive behavior strongly influenced their relationship satisfaction.

Although another study (Akanbi & Oyewo, 2014) differs from other studies in terms of sample group and study purpose, it is closely related to the current study. This study aims to examine the effects of work-family conflict and perceived social support on marital satisfaction of dual-career families. The sample included dual-income married individuals living in Nigeria (n = 159). It was concluded that marital satisfaction can increase when work-family conflict is managed with effective methods and individuals receive social support when they need it.

Additionally, Falconier et al. (2015) aimed to examine the mediating role of supportive dyadic coping in the association between marital sanctity and marital satisfaction. Data were collected from 215 couples living in Romania. It shows that supportive dyadic coping mediates the relationship between marital sanctity and marital satisfaction.

The study (Fallahchai at al., 2019), whose sample group (dual-career married couples) and variables are similar to the current study, aims to investigate the association between job stress and marital quality in dual-career couples in Iran. Data were collected from 206 heterosexual couples (n = 412). The study revealed a negative association between job stress and marital quality. However, it was found that perceptions of support from one's partner and engaging in shared dyadic coping had a positive influence on this relationship. The results indicated that supportive behavior and dyadic coping acted as moderators, lessening the impact of stress on dual-career couples and subsequently enhancing the quality of their marriages. These findings highlight the pivotal role of dyadic coping in reducing stress and improving the quality of relationships within dual-career couples in Iran.

While studies on dual-career couples continue to increase rapidly around the world, it is thought that studies on dual-career couples in Türkiye are quite limited and studies in this field should be increased in the literature. The purpose of the study conducted by Canel (2007) is to examine whether the group work developed by the researcher, designed to increase the psychological satisfaction obtained from marriage by developing problem-solving skills in the family, has an effect on increasing the marital satisfaction of couples. The sample of the study consisted of 10 married individuals who have been married for 5 years and have children. After the research, it was determined that "group work to increase marital satisfaction by developing problem-solving skills in the family" was effective in increasing the marital satisfaction of married individuals, their marital harmony, their happiness in marital relations, their closeness to their spouses, and reducing their conflicts with their spouses and anger towards their spouses.

In their study, Çağ and Yıldırım (2013) aimed to investigate the extent to which various variables including gender, education level, number of children, spousal support, duration of marriage, age difference between spouses, family income level, sexual life satisfaction, and sharing of domestic responsibilities predict marital satisfaction. A total of 811 married individuals, comprising 448 women and 363 men, participated in the research. Surprisingly, the study found that variables such as gender, number of children, and duration of marriage, age difference between

spouses, family income level, and sharing of domestic responsibilities did not significantly predict marital satisfaction. Instead, the findings indicated that marital satisfaction was predicted by perceived partner support, sexual life satisfaction, and education levels.

Another study investigates the correlation between job stress, job-family conflict, and marital satisfaction (Kazmi et al., 2017). Its primary aim is to uncover the mediating role of job-family conflict in the association between job stress and marital satisfaction. The research sample comprised 217 faculty members from 8 private universities in Peshawar, Khyber Pakhtunkhwa (KPK) province of Pakistan. Statistical analyses revealed a significant link between job stress and work-family conflict in private university teachers. Furthermore, both job stress and job-family conflict exhibited negative correlations with marital satisfaction.

Research was conducted by Göçer (2021) to reveal the situation experienced by academics who are dual-career spouses working at universities. The research was conducted with the participation of 71 female and 55 male dual-career academics. According to the findings of the research, being married, having children or having a large number of children does not pose a problem for dual-career married couples. It has been understood that the dual-career spouse phenomenon creates problems, especially for some female academics, due to gender roles and women's obligations such as work, family and child care.

The purpose of the study conducted by Özgülük Üçok, & Hatipoğlu-Sümer, (2023) is to examine the potential mediating roles of relationship satisfaction and dual-career lifestyle satisfaction in the relationship between investments and commitment to a relationship. Participants consisted of 213 dual-career Turkish married couples who had been married for at least seven months. The results of the study revealed that the relationship of both past and planned intangible investments with commitment was partially mediated by relationship satisfaction for both wives and husbands. None of these studies addressed the impact of marital satisfaction, dyadic coping, or psychological symptoms on couples with dual-career.

2.4. Summary

The literature continues to expand every year in order for married couples to cope with the stress they experience individually or as a couple, along with the changes in the family structure, and to maintain the healthy function of the marriage. Coping with these stress situations has been an issue emphasized by researchers, as a result of studies conducted with couples, where dyadic coping is an important predictor of the sustainability of the marriage. The concept of dyadic coping is based on different theoretical frameworks (Berg & Upchurch, 2007; Coyne & Smith 1991; Kraemer et al., 2011; Revenson, 1994; Revenson & Lepore, 2012). This study will be based on the systemic-transactional model because this model specifically focuses on the role of reciprocity between partners, in which one partner expands on the other partner's skills and strategies and expands the other partner's resources by providing additional options through strategies for coping with major life events. Furthermore, a core assumption of STM suggests that stress experienced by one partner inevitably affects the other partner through processes of stress spillover (Bodenmann et al., 2007) and crossover (Neff & Karney, 2007). It is argued that when individuals encounter stressors and do not have adequate coping resources, the distress they experience may appear in behaviors in other areas of life (Cooper et al., 2019). This means that stress experienced by an individual outside the relationship can affect their romantic partner, while stress experienced within the relationship can affect individuals outside the romantic relationship, such as co-workers (Westman, 2001). As women's participation in the workforce increases and the nature of marriage is affected, studies are directed towards couples who are both working. With the increase in women's employment in business life, different concepts have emerged in terms of dual-occupation, dual-career, dual-income, working parents and dual-career marriage (Bhowon, 2013). The dual-career family structure has advantages such as economic relief, equal distribution of housework and child care responsibilities, expansion of the social circle, and support for personal development (Gorissen, 2009; Green & Zenisek, 1983; Hall & Hall, 1979; Soysal, 2009). However, in addition to its advantages, there are also aspects that negatively affect marital dynamics, such as spreading job stress to the family, conflicting demands, fulfilling domestic obligations, decreasing the time they spend with each other, and

decreasing marital satisfaction (Blumenstein & Swartz, 1983; Duxbury, 2003; Edwards & Rothbard, 2000; Schulz et al., 2004). However, the importance of effective communication skills, the support that spouses provide to each other, and positive dyadic coping in marriage have been proven in coping with these difficulties (Falconier et al., 2015; Landis et al., 2013; Ray, 1990; Wunderer & Schneewind, 2008). In this context, the aim of this study is to investigate the mediating role of positive dyadic coping in the association between psychological symptoms and marital satisfaction in dual-career married couples living in Türkiye.

CHAPTER 3

METHOD

The methodological steps that are used to accomplish the goal of the current study are introduced in this chapter. First, a description of the overall design of the main study is provided. Second, information about the sample's characteristics is given. Thirdly, a thorough description of the psychometric characteristics of the data collection instruments are presented as part of the pilot study. Information about the results of the pilot study, including the pilot sample, procedure, hypothesis tests and measures, is presented. Fourthly, data collection procedures of the main study are explained. Afterward, information regarding the data analyses along with description of Actor-Partner Interdependence Model (APIM) is provided.

3.1. Research Design

The purpose of this study was to examine the mediating role of positive dyadic coping in the association between psychological symptoms and marital satisfaction in dual-career married couples living in Türkiye. The correlational research design was used to explore the association among the variables. The design of the study is associaitional research, in which two or more quantitative variables are related to each other and the possible strength of this relationship is investigated (Fraenkel et al., 2011).

3.2. Participants of the Main Study

The inclusion criteria for recruiting the sample of the main study were as follows: (a) being involved in a dual-career marriage, (b) being married for at least three months, and (c) living in Türkiye. The sample of the current study consisted of 120 dual-career married couples (n = 240). The sample was recruited via snowball sampling (Biernacki & Waldorf, 1981) and purposive sampling (Bernard, 2002). There are different guidelines regarding the appropriate sample size for performing path analyses in AMOS. At least 200 participants were suggested for running path analyses (Kline, 2011). Fidell and Tabachnick (2012) suggest a formula for

calculating the convenient sample size: N > 50 + 8m. In the current study, the number of independent variables (psychological symptoms) is one. According to the specified formula, it is sufficient for the number of samples to be greater than 58, but in this study the number of samples is 240. The marriage duration of the sample varies from 6 months to 360 months (*M* = 66.36, *SD* = 73.88). Of the total sample, 22.1% (*n* = 53) were undergraduate education, 71.1% (*n* = 172) were graduate education, and 6.3% (*n* = 15) were high school graduation. When the income ranges of participants are evaluated, of the participants, 4.2% (*n* = 10) had an income between 13401-23401 ₺, 10.4% (*n* = 25) had an income between 23402-33402 ₺, 21.3% (*n* = 51) had an income between 33403-43403 ₺, and 64.2% (*n* = 154) had an income of 43403 ₺ and above as illustrated in Table 3.1. Of the total sample, 51.3% (*n* = 124) had a nuclear family and 48.3% (*n* = 116) did not have children.

Table 3.1 *Demographic Characteristics of the Participants of the Main Study (N=240)*

		F	*%*
Gender			
	Female	120	50
	Male	120	50
	Total	240	100
Education			
	High school	15	6.3
	Graduate school	172	71.7
	Undergraduate	53	22.1
	Total	240	100
Individual Income			
	0-13400 TL	22	9.2
	13401-23401 TL	62	25.8
	23402-33402 TL	85	35.4
	33403-43403 TL	32	13.3
	Above 43403 TL	39	16.3
	Total	240	100
Total Income			
	13401-23401 TL	10	4.2
	23402-33402 TL	25	10.4
	33403-43403 TL	51	21.3
	Above 43403 TL	154	64.2

Table 3.1 (continued)

		F	*%*
	Total	240	100
Family structure			
	Nuclear Family	116	48.3
	Extended family	124	51.7
	Total	240	100

3.3. Data Collection Instruments

An online questionnaire was developed to obtain information about couples' psychological symptoms, dyadic coping, marital satisfaction, and demographic characteristics. The Depression Anxiety Stress Scale (DASS-21; Sarıçam, 2018) was used to evaluate psychological symptoms (see Appendix D for sample items); The Dyadic Coping Inventory (DCI; Kurt & Akbaş, 2019) to measure couple dyadic coping skills with stress (see Appendix C for sample items); The Marital Satisfaction Scale (MSS; Çelik & İnanç, 2009) was used to measure marital satisfaction (see Appendix E for sample items). In addition, a demographic form was used to collect information about the individual and relational characteristics of dual-career married couples (see Appendix F). Before the current study, a pilot study was conducted to analyze the reliability and validity of the scales.

3.3.1. Pilot Study

A pilot study was needed to test the validity and reliability of the instruments used in the main study. Detailed information about the demographic information of the sample, the procedure of the study and the assumption tests is presented. Then, the instruments were introduced along with the findings obtained as a result of the validity and reliability analyzes performed for each instrument. Pilot study data were not included in the main analysis.

3.3.1.1. Participant of Pilot Study

The inclusion criteria for recruiting the sample of the pilot study were as follows that (a) being involved in a dual-career marriage, (b) being married for at least three months, and (c) living in Türkiye. Data were collected from 260 individuals for the

pilot study. The marriage duration of the sample varies from 6 months to 600 months (M = 61.46, SD = .45). Regarding the gender of participants, 71.9% (n = 187) were women, and 28.1% (n = 73) were men. Of the total sample, 70.4% (n = 66) had undergraduate education, 70.4% (n = 183) had graduate education, and 4.2% (n = 11) had high school graduation. When the income ranges of participants are evaluated, of the participants, 12.7% (n = 33) had an income between 0-13400 TL, 27.7% (n = 72) had an income between 13401-23401 ₺, 35% (n = 91) had an income between 23402-33402 ₺, 10.4% (n = 27) had an income between 33403-43403 ₺ and 14.2% (n = 37) had an income of 43403 ₺ and above as illustrated in Table 3.2. Of the total sample, 50% (130) had a nuclear family and 50% (130) did not have children.

Table 3.2 *Demographic Characteristics of the Participants of the Pilot Study (N=260)*

		F	*%*
Gender			
	Female	187	71.9
	Male	73	28.1
	Total	260	100
Education			
	High school	11	4.2
	Graduate school	183	70.4
	Undergraduate	66	25.4
	Total	260	100
Individual Income			
	0-13400 TL	33	12.7
	13401-23401 TL	72	27.7
	23402-33402 TL	91	35.0
	33403-43403 TL	27	10.4
	Above 43403 TL	37	14.2
	Total	260	100
Total Income			
	0-13400 TL	3	1.2
	13401-23401 TL	16	6.2
	23402-33402 TL	34	13.1
	33403-43403 TL	50	19.2
	Above 43403 TL	157	60.4

Table 3.2 (continued)

		F	*%*
	Total		100
Family structure			
	Nuclear Family	130	50
	Extended family	130	50
	Total	260	100

3.3.1.2. Procedure of the Pilot Study

Approval was obtained from the TED University Human Subjects Ethics Committee to begin data collection (see Appendix A). After taking approval, the pilot study data collection period was carried out between September 2023 and October 2023. The sample of the pilot study was recruited by snowball (Biernacki & Waldorf, 1981) and purposive sampling (Bernard, 2002) methods. Purposive sampling is a nonrandom technique in which the researcher decides what needs to be known and attempts to find people who are willing to pass on the knowledge through experience (Bernard, 2002). In the snowball technique, participants are reached through referrals from people who share or know others with the same characteristics that are the subject of the research (Biernacki & Waldorf, 1981). Since snowball and purposive sampling techniques were used in this study, the individuals who voluntarily participated in the research were able to suggest their dual-career married friends to fill out the online questionnaire. The questionnaires to be used in the pilot data and an online version of the informed consent were prepared in Google Forms and the data were collected online via social media channels such as WhatsApp, Instagram, Telegram, Twitter and LinkedIn. It took approximately 20-25 minutes to fill out the surveys.

3.3.1.3. Assumptions of Confirmatory Factor Analysis (CFA)

Before analyzing the pilot study, the pilot data were screened and the assumptions of CFA, such as sample size, missing values, normality, outliers, and linearity were tested (Ullman, 2001). It is recommended to have at least 200 participants to conduct CFA (Kline, 2011). This criterion was met by reaching 260 participants in the pilot study. Furthermore, the data were screened for missing values. However, having to

answer the current question in order to answer the next question during data collection prevented the possibility of missing data.

Then, the normality assumption was evaluated. A kurtosis value close to 3 indicates normal distribution, values above 3 indicate positive kurtosis, and values below 3 indicate negative kurtosis (Kline, 2011). Additionally, if the skewness value is above 3, the distribution is called skewed. The findings of normality analyzes showed that the sample in the current study did not exhibit a normal distribution. The values of kurtosis and skewness for depression anxiety stress was found to be between .5 and -.5. The values of kurtosis and skewness for dyadic coping was found to be between -.3 and -.6. The values of kurtosis and skewness for marital satisfaction was found to be between .1 and -1. Although transformation is often used to address non-normal data, Tabachnick and Fidell (2007) states that this approach can introduce challenges when interpreting findings derived from transformed data. Consequently, the decision was made to proceed with the non-normally distributed data. This choice aimed to maintain the original representation of the participants' reports rather than altering the data through manipulation methods. However, bootstrapping was used to eliminate the effects of non-normal distribution of the data. Bootstrapping, described as a computer-based resampling technique, serves the purpose of estimating standard errors for non-normal distributions (Kline, 2011).

Z scores of cases lower than -3.29 and higher than +3.29 are labeled as outliers (Tabachnick & Fidell, 2007). In the pilot study, it was observed that both the kurtosis and skewness coefficients of depression anxiety stress, dyadic coping and marital satisfaction were within the expected range, specifically between -3.29 and +3.29. Z scores range from -1.5 to 2.7 for anxiety, stress and depression. Z scores range from -2.9 to 1.6 for dyadic coping. Z scores for marital satisfaction vary between -2.8 and 1.1.

Following data screening, Confirmatory Factor Analysis (CFA) was performed to assess the construct validity of the measures, utilizing AMOS Version 24 (Analysis of Moment Structures; Arbuckle, 2016). Additionally, Cronbach’s alpha coefficients were computed to evaluate the internal consistency of the scales. The lowest accepted Cronbach's alpha value is stated as .60 (Hair et al., 2010).

Before conducting CFA, two analyses were performed to assess the assumptions of linearity. The linearity assumption was evaluated using residual plots and scatterplots, which upon visual inspection, indicated that the data met the linearity assumption. In the assessment of model fit in CFA, the approximate fit indices were used. Kline (2011) categorized fit indices into three groups that are absolute fit indices, incremental (comparative) fit indices, and parsimony-adjusted fit indices. Within the incremental fit indices, this study utilized TLI, CFI, and AGFI. Hu and Bentler (1999) recommended prioritizing the Tucker-Lewis Index (TLI) as it compares the proposed model's performance to the null model. AGFI values more than .80 signify an acceptable degree of fitness (Browne & Cudeck, 1993). For this study, TLI and CFI values were determined to be between .90 and .95 is acceptable (Hu & Bentler, 1999).

In the assessment of absolute fit indices, considerations were made for the standardized root mean square residual (SRMR; Hu & Bentler, 1999), as well as χ^2 and the χ^2/df ratio (Brown, 2006). Ideally, χ^2 is expected to be close to zero for a better fit. Various researchers have proposed different criteria for the χ^2/df ratio (Anderson & Gerbing, 1984; Wheaton, 1987). The primary challenge arises from the fact that the chi-square value exhibits a direct connection to the sample size, frequently leading to the rejection of model fit, particularly in large samples (N>50) (Jöreskog & Sörbom, 1993). For the present study, the recommendation provided by Kline (2011) was adhered to, with a cutoff point considered to be 3. This approach helps mitigate the impact of sample size on the Chi-Square statistic, allowing for a more accurate assessment of model fit. Regarding SRMR, following Hu and Bentler's recommendation (1999), it was preferred that the SRMR value be close to or less than .08. These guidelines for interpreting SRMR, χ^2, and the χ^2/df ratio were utilized as part of the assessment for absolute fit indices in evaluating the model's adequacy in the analysis.

Finally, Hu and Bentler (1999) suggested the Root Mean Square Error of Approximation (RMSEA) and Goodness of Fit Index (GFI) as parsimony adjusted fit indices, providing insights into how well the hypothesized model fit in the population. In the present study, the criteria chosen for RMSEA were as follows

RMSEA < .05 indicated good fit, .05 < RMSEA < .10 indicated mediocre fit, and RMSEA > .10 indicated poor fit, as recommended by Browne and Cudeck (1993). Moreover, GFI values more than .80 signify an acceptable degree of fitness (Browne & Cudeck, 1993. These specific criteria were utilized to assess the alignment of the hypothesized model with the population in the current study.

3.3.1.4. Depression Anxiety Stress Scale (DASS-21)

This inventory was developed to measure emotional distress across three specific areas (Lovibond & Lovibond, 1995) which are depression, anxiety, and stress. Each category focused on distinct aspects, such as loss of self-esteem/incentives and depressed mood for depression, fear and anticipation of negative events for anxiety, and a persistent state of overarousal and low frustration tolerance for stress. The questionnaire comprised 21 items, with seven items allocated to each category. Items are rated on a 4-point Likert scale (0 = *did not apply to me at all*, 3 = *applied to me very much, or most of the time*). Respondents were asked to indicate how much each statement applied to them over the last week. Higher scores on the questionnaire indicated more severe emotional distress.

DASS-21 was administered to students, faculty, and non-teaching staff at a private university in Malaysia (James et al., 2022). The internal consistency of the DASS-21, measured by Cronbach's alpha, was found to be high at .96, indicating excellent reliability. Furthermore, the Cronbach's alpha values for each sub-scale (anxiety, depression, and stress) were .87, .92, and .89, respectively.

Scale (see Appendix D) was adapted to Turkish by Sarıçam (2018). The scale, which consists of 21 items in total, has 3 subscales. These subscales are depression, anxiety, and stress. Total scores are obtained for each subscale. The 4-point Likert-type scale is scored between 0 (*never*) and 3 (*always*). In the validity studies of the scale, criterion and construct validity analyzes were made. The criterion validity analysis was based on the Depression Anxiety Stress Scale-42 (DASS-42) and it was found that there was a positive significant correlation between DASS-42 and DASS-21. In the reliability studies of the scale, test-retest reliability and Cronbach Alpha internal consistency coefficient analyzes were performed. Test-retest reliability of

depression, anxiety and stress subscales was .68, .66 and .61, respectively; Cronbach Alpha internal consistency coefficients were found to be .87, .85 and .81. In this study, the psychometric properties of the DASS-21, which has three subscales which are depression, anxiety, and stress were tested and in the main study, the total scale was used.

3.3.1.4.1. Confirmatory Factor Analysis of DASS-21

The three-factor structure for the DASS-21 was tested using CFA. It was aimed to determine whether the factor structures in the original form of the Depression Anxiety Stress Scale (DASS-21) scale were confirmed within the framework of this research. The confirmatory factor analysis (CFA) results performed for this purpose are given in Figure 3.1. It was carried out using AMOS Version 24 (Arbuckle, 2016). The results of the confirmatory factor analysis are stated below.

The calculated values from the confirmatory factor analyses performed on the Depression Anxiety Stress Scale were as follows [$\chi 2/df = 2.5$ ($p < .01$), CFI = .91, TLI = .90, RMSEA = .06, SRMR = .06, GFI = .87, and AGFI = .83] (see Table 3.3). So, the modification indices were examined, and the error covariance of item 3 (I had the feeling that I had no expectations.) and item 5 (nothing excites me.); item 14 (I noticed that my mouth was dry.) and item 13 (I had difficulty breathing.); item 20 (I tend to overreact to events.) and item 22 (I felt like I was using too much neural energy.) was freely. Following item examination, it became evident that there was a theoretical rationale for correlating the covariance of errors between these items. The model fit better after the modification. The primary challenge arises from the fact that the Chi-Square value exhibits a direct connection to the sample size, frequently leading to the rejection of model fit, particularly in large samples ($N > 50$) (Jöreskog & Sörbom, 1993). χ^2/df ratio was 2.3 which was within the range of suggested criteria of good fit, which is 3 (Kline, 2011). This approach helps mitigate the impact of sample size on the Chi-Square statistic, allowing for a more accurate assessment of model fit. TLI and CFI between .90 and .95 is acceptable (Hu & Bentler, 1999). GFI and AGFI values more than .80 signify an acceptable degree of fitness (Browne & Cudeck, 1993). The value of .06 for SRMR is acceptable as it is less than .08 (Hu & Bentler, 1999). For RMSEA, a value of .06 is considered .05 and .10 is a mediocre

fit (Browne & Cudeck, 1993). Based on these analyses, it can be concluded that the factor structures in the original version of the inventory were validated for this study, indicating that the inventory demonstrates adequate validity.

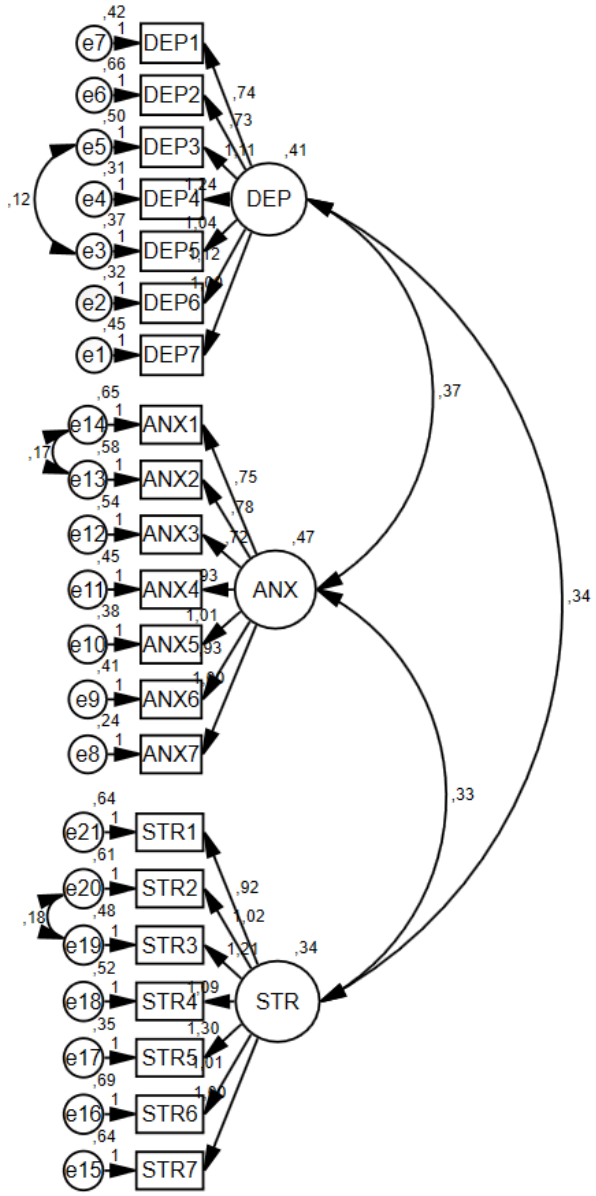

Figure 3.1 *Comfirmatory Factor Analysis for Depression Anxiety Stress Scale (DASS)*

Note. DEP= depression; ANX= anxiety; STR= stress All t values are significant at *$p < .001$.

Table 3.3 *Goodness of Fit Indices for Three- Factor Model of DASS-21*

	χ^2	*df*	χ^2/df	*CFI*	*TLI*	*RMSEA*	*SRMR*	*GFI*	*AGFI*
Model	457,423*	179	2,3	.91	.90	.06	.06	.87	.83

*Note. *p< .05*

The standardized estimates, ranging from .50 to .82 as depicted in Table 3.4, met the acceptability criteria. These values were considered satisfactory as they exceeded the cutoff point of .30, a guideline recommended by Tabachnick and Fidell (2007).

Table 3.4 *Standardized Regression Weights and Squared Multiple Correlations of DASS-21*

Construct	Item	Standardized Factor Loadings	Unstandardized Estimates	*t*	R^2
DEP	Dep1	.59	.74	8.94	.35
	Dep2	.50	.73	7.53	.25
	Dep3	.71	1.11	10.54	.50
	Dep4	.82	1.24	12.03	.67
	Dep5	.74	1.04	10.93	.54
	Dep6	.78	1.12	11.60	.61
	Dep7	.69	1.00		.48
ANX	Anx1	.54	.75	8.69	.29
	Anx2	.57	.79	9.40	.33
	Anx3	.56	.72	9.12	.31
	Anx4	.69	1.00	11.72	.48
	Anx5	.75	1.01	12.86	.56
	Anx6	.70	1.02	12.00	.50
	Anx7	.81	1.00		.66
STR	Str1	.56	1.00	7.54	.31
	Str2	.61	1.02	7.98	.37
	Str3	.72	1.21	9.02	.51
	Str4	.66	1.09	8.56	.44
	Str5	.79	1.30	9.61	.63
	Str6	.58	1.01	7.74	.34
	Str7	.59	1.00		.35

Note. DEP= depression; ANX= anxiety; STR= stress All t values are significant at **p< .001*.

3.3.1.4.2. Reliability Analyses of DASS-21

Cronbach Alpha internal consistency coefficient was calculated to determine the reliability of the total DASS-21 and its subscales. As a result of these analyses, the Cronbach Alpha coefficient of the scale, which consists of 21 items and three factors, was calculated as .94 for the total scale, .84 for the depression subscale, .85 for the anxiety subscale and .87 for the stress subscale. According to the reliability ranking suggested by Cunha et al. (2016), the DASS-21 as a total has high reliability as well as its subscales. Cronbach Alpha internal consistency coefficient of DASS-21 was calculated for the main study. As a result of this analysis, the Cronbach Alpha coefficient was calculated as .93 for the total scale depicting that DASS-21 has high reliability.

3.3.1.5. Dyadic Coping Inventory (DCI)

The Dyadic Coping Inventory (DCI), developed by Bodenmann (2008), aims to measure perceived communication and dyadic coping. There are four types of dyadic coping which includes supportive, delegated, negative, and common. Comprising 37 items, DCI employs a 5-point Likert type scale (1 = *very rarely*, 5 = *very often*). The psychometric analysis of the DCI, conducted by Bodenmann (2008) using samples of men and women in intimate relationships (n = 1,072 and 1,327), revealed adequate to high internal consistency for the DCI subscales (α range: .71 to .92). DCI has ten subscales. The subscales of DCI include (1) stress communicated by oneself, (2) supportive dyadic coping by oneself, (3) delegated dyadic coping by oneself, (4) negative dyadic coping by oneself, (5) stress communication of the partner, (6) supportive dyadic coping of the partner, (7) delegated dyadic coping of the partner, (8) negative dyadic coping by partner, (9) common dyadic coping, and (10) evaluation of dyadic coping.

In a study by Kurt and Akbaş (2019), the inventory (see Appendix C) was adapted to Turkish. The research sample comprised 720 married individuals with children employed in private and state institutions in Adana. The Turkish version of the dyadic coping inventory includes 37 items, rated from 1 (*never*) to 5 (*always*). The inventory encompasses thirteen subscales which include (1) stress communicated by

oneself, (2) stress communication of the partner, (3) negative dyadic coping by oneself, (4) negative dyadic coping by partner, (5) self-emotional-focused support, (6) partner emotional-focused support, (7) problem-focused dyadic coping, (8) self-problem-focused support, (9) partner problem-focused support, (10) delegated dyadic coping by oneself, (11) delegated dyadic coping by partner, (12) emotional-focused dyadic coping, and (13) evaluating dyadic coping. Supportive coping and dyadic coping are further divided into emotion-focused and problem-focused categories. The inventory yields three distinct total scores concerning an individual's perception of their own coping as a couple, their perception of their spouse's coping behaviors as a couple, and their dyadic coping behaviors when encountering stress with their spouse. The total score of (1) self-emotional-focused support, (2) partner emotional-focused support, (3) problem-focused dyadic coping, (4) self-problem-focused support, (5) partner problem-focused support, (6) delegated dyadic coping by oneself, (7) delegated dyadic coping by partner, (8) emotional-focused dyadic coping subscales was obtained which comprised the positive dyadic coping subscale of the dyadic coping inventory. In the current study positive dyadic coping subscale was used in the main analyses. The total score of (1) negative dyadic coping by oneself and (2) negative dyadic coping by partner subscales was obtained which comprised the negative dyadic coping subscale of the dyadic coping inventory. Regarding the reliability assessment of the inventory, internal consistency analysis indicated Cronbach's alpha values ranging from .63 to .87 across different subscales (Kurt & Akbaş, 2019). Additionally, quasi-test values fell between .63 and .85. These results suggest that the inventory maintains a satisfactory level of reliability across its various subscales.

3.3.1.5.1. Confirmatory Factor Analysis of DCI

The thirteen-factor structure for the Dyadic Coping Inventory was tested using CFA. It was aimed to determine whether the factor structures in the original form of the Dyadic Coping Inventory scale were confirmed within the framework of this research. The confirmatory factor analysis (CFA) results performed for this purpose are given in Figure 3.2. It was carried out using AMOS Version 24 (Arbuckle, 2016). The results of the confirmatory factor analysis are stated below.

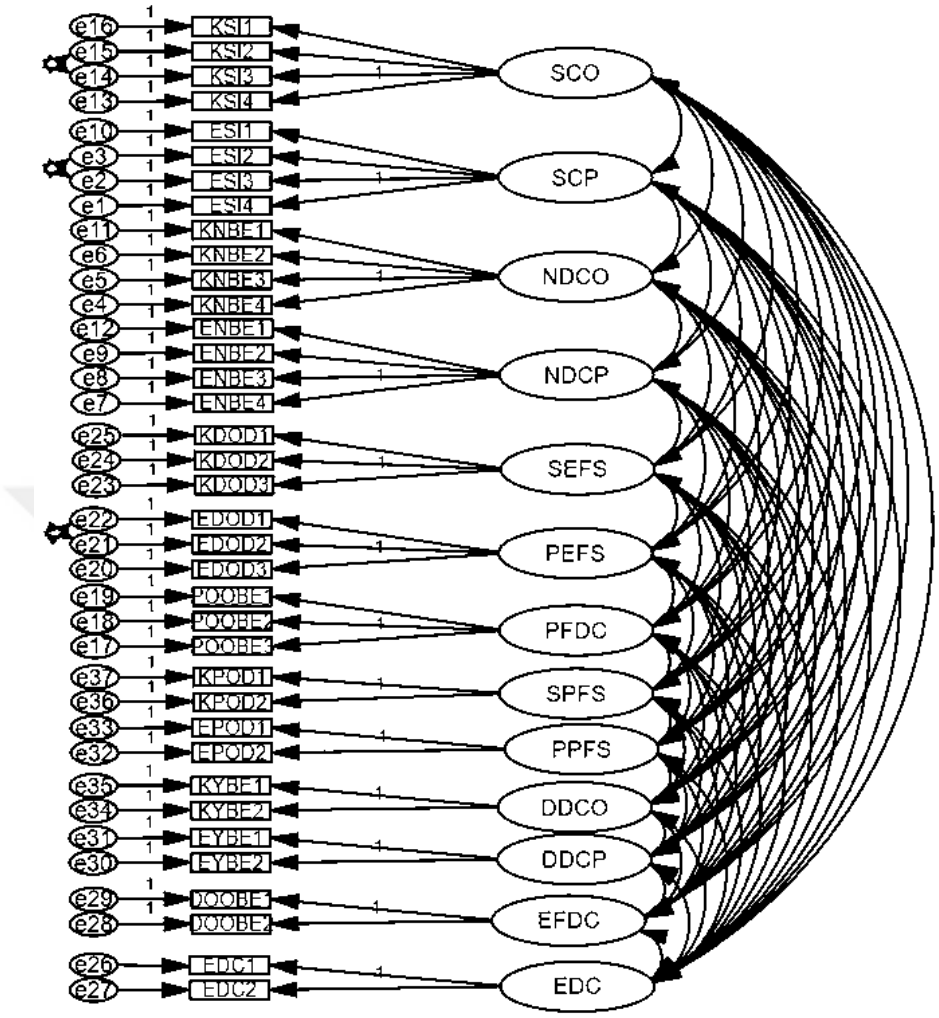

Figure 3.2 Confirmatory Factor Analyses for Dyadic Coping Inventory (DCI)

Note. SCO= stress communicated by oneself; SCP= stress communication of the partner; NDCO= negative dyadic coping by oneself; NDCP= negative dyadic coping by partner; SEFS= self-emotional-focused support; PEFS=partner emotional-focused support; PFDC=problem-focused dyadic coping; SPFS=self-problem-focused support; PPFS= partner problem-focused support; DDC= delegated dyadic coping by oneself; DDCP= delegated dyadic coping by partner; EFDC= emotional-focused dyadic coping; EDC= evaluating dyadic coping. All t values are significant at *p< .001.

The calculated values from the confirmatory factor analyses performed on the Dyadic Coping Inventory were as follows [$\chi 2/df = 1.9$ ($p < .01$), CFI = .92, TLI = .90, RMSEA = .06, SRMR = .06, GFI = .83, and AGFI = .79] (Table 3.5). The modification indices were examined, and the error covariance of item 14 (when I

have a lot of work to do, I ask my partner to do something for me.) and item 15 (when I am not well or have problems, I show it to my partner with my behavior.); item 2 (when my spouse has a lot of work, he asks me to help him.) and item 3 (when my spouse is not well or has problems, he shows it to me with his behavior.); item 21 (I show empathy and understand my partner.) and item 22 (I express to my partner that I am on his/her side.) was estimated. Following item examination, it became evident that there was a theoretical rationale for correlating the covariance of errors between these items. The model fit better after the modification.

χ^2/df ratio was 1.9 which was within the range of suggested criteria of good fit, which is 3 (Kline, 2011). This approach helps mitigate the impact of sample size on the Chi-Square statistic, allowing for a more accurate assessment of model fit. TLI and CFI between .90 and .95 is acceptable (Hu & Bentler, 1999). GFI value more than .80 signify an acceptable degree of fitness (Browne & Cudeck, 1993). The value of .06 for SRMR is acceptable as it is less than .08 (Hu & Bentler, 1999). For RMSEA, a value of .06 is considered .05 and .10 is a mediocre fit (Browne & Cudeck, 1993). Only AGFI was not within the expected value ranges. This was related to the small size of the pilot sample. Based on these analyses, it can be concluded that the factor structures in the original version of the inventory were validated for this study, indicating that the inventory demonstrates adequate validity.

Table 3.5 *Goodness of Fit Indices for Thirteen - Factor Model of Dyadic Coping*

	χ^2	*Df*	*χ^2/df*	*CFI*	*TLI*	*RMSEA*	*SRMR*	*GFI*	*AGFI*
Model	947,331*	491	1,9	.92	.90	.06	.06	.83	.79

*Note. *p< .05*

As shown in Table 3.6, standardized estimates ranging from .23 to .92 met the acceptability criteria. These values were deemed satisfactory as they surpassed the cutoff point of .30, a guideline advocated by Tabachnick and Fidell (2007).

Table 3.6 *Standardized Regression Weights and Squared Multiple Correlations of DCI*

Construct	Item	Standardized Factor Loadings	Unstandardized Estimates	*T*	R^2
SCO	1	.81	.92	14.39	.65
	2	.46	1.00	7.43	.21
	3	.29	1.06	4.56	.09
	4	.88	1.00		.78
SCP	1	.85	1.05	14.32	.73
	2	.48	.98	7.45	.22
	3	.23	.87	3.46	.05
	4	.81	1.00		.65
NDCO	1	.64	1.00	8.01	.41
	2	.63	1.21	7.94	.40
	3	.50	.87	6.64	.25
	4	.70	1.00		.49
NDCP	1	.62	1.36	6.65	.39
	2	.90	1.88	7.61	.80
	3	.78	1.45	7.34	.61
	4	.47	1.00		.22
SEFS	1	.86	1.20	13.58	.74
	2	.84	1.13	13.23	.70
	3	.74	1.00		.55
PEFS	1	.79	.88	16.74	.62
	2	.72	1.02	14.46	.52
	3	.87	1.00		.76
PFDC	1	.89	.99	20.92	.79
	2	.40	.89	6.73	.16
	3	.90	1.00		.82
SPFS	1	.56	.98	9.54	.31
	2	.86	1.00		.74
PPFS	1	.85	1.00	18.27	.73
	2	.87	1.00		.75
DDCO	1	.58	.80	8.71	.33
	2	.88	1.00		.78
DDCP	1	.72	.99	10.38	.53
	2	.87	1.00		.75
EFDC	1	.80	.98	12.97	.65
	2	.92	1.00		.85

Table 3.6 (continued)

Construct	Item	Standardized Factor Loadings	Unstandardized Estimates	*t*	R^2
EDC	1	.87	.95	8.71	.33
	2	.79	1.00	6.73	.78

Note. SCO= stress communicated by oneself; SCP= stress communication of the partner; NDCO= negative dyadic coping by oneself; NDCP= negative dyadic coping by partner; SEFS= self-emotional-focused support; PEFS=partner emotional-focused support; PFDC=problem-focused dyadic coping; SPFS=self-problem-focused support; PPFS= partner problem-focused support; DDC= delegated dyadic coping by oneself; DDCP= delegated dyadic coping by partner; EFDC= emotional-focused dyadic coping; EDC= evaluating dyadic coping. All t values are significant at *p< .001.

3.3.1.5.2. Reliability Analyses of Dyadic Coping Inventory

Cronbach Alpha internal consistency coefficient was calculated to determine the reliability of the total Dyadic Coping Inventory (DCI) and its subscales. As a result of this analyses, the Cronbach Alpha internal consistency coefficient of the scale, which consists of 37 items and thirteen factors, was calculated as .93 for the total scale, .72 for the "stress communicated by oneself" subscale, .73 for the " stress communication of the partner " subscale, .70 for the "negative dyadic coping by oneself " subscale, .78 for the "negative dyadic coping by partner " subscale, .85 for the " self-emotional-focused support " subscale, .87 for the " partner emotional-focused support " subscale, .77 for the " problem-focused dyadic coping " subscale, .65 for the " self-problem-focused support " subscale, .85 for the " partner problem-focused support " subscale, .67 for the " delegated dyadic coping by oneself " subscale, .76 for the " delegated dyadic coping by partner " subscale, .85 for the “ emotional-focused dyadic coping ” and .95 for the " evaluating dyadic coping " subscale. According to the reliability interval suggested by Cunha et al. (2016), the dyadic coping inventory as a total has high reliability, some of its subscales (negative dyadic coping by partner, partner emotional-focused support, problem-focused dyadic coping, partner problem-focused support, delegated dyadic coping by partner, emotional-focused dyadic coping, evaluating dyadic coping) have high reliability and the other subscales of dyadic coping (stress communicated by oneself,

self-problem-focused support, delegated dyadic coping by oneself) have moderate reliability. In the main study, a total score of positive dyadic coping was used. When tested for the main study, the Cronbach alpha coefficient was found .90 for the "positive dyadic coping" subscale which include of self-emotional-focused support, partner emotional-focused support, problem-focused dyadic coping, self-problem-focused support, partner problem-focused support, delegated dyadic coping by oneself, delegated dyadic coping by partner, and emotional-focused dyadic coping depicting high reliability.

3.3.1.6. Marital Satisfaction Scale (MSS)

Marital Satisfaction Scale which is used to measure the marital satisfaction levels of married women consists of a total of 13 items developed by Çelik and İnanç (2009) (see Appendix E). It is a 5-point Likert-type scale (1 = *not suitable for me at all* 5 = *completely suitable for me*). The high score obtained from the scale indicates the high level of marital satisfaction of married people. As a result of explanatory and confirmatory factor analyses, a three-factor structure called 'family', 'sexuality', and 'self' emerged. Internal consistency Cronbach Alpha values, item total score correlations, and test-retest coefficients of the whole scale and its subscales were found to be high. Criterion-related validity studies also supported the validity of the scale. The internal consistency coefficients of the scale were calculated and it was determined that the internal consistency coefficient of the whole scale was .79, the internal consistency coefficient of the family subscale was .83, the internal consistency coefficient of the sexuality subscales was .81, and the internal consistency coefficient of the self-subscales was .75 (Çelik & İnanç, 2009). The test-retest reliability study of the Marital Satisfaction Scale was conducted with 70 married individuals with a one-month interval. The test-retest correlation coefficient of the Marriage Satisfaction Scale was found to be .86. The test-retest correlation coefficient was .83 for the family subscale, .80 for the sexuality subscale, and .74 for the self-subscale.

3.3.1.6.1. Confirmatory Factor Analyses of Marital Satisfaction

The three-factor structure for the Marital Satisfaction Scale was tested using CFA. The results of the confirmatory factor analyses (CFA) performed to determine whether the factor structures in the original form of Marital Satisfaction were confirmed within the framework of this research are given in Figure 3.3. It was carried out using AMOS Version 24 (Arbuckle, 2016). The results of the confirmatory factor analysis are stated below.

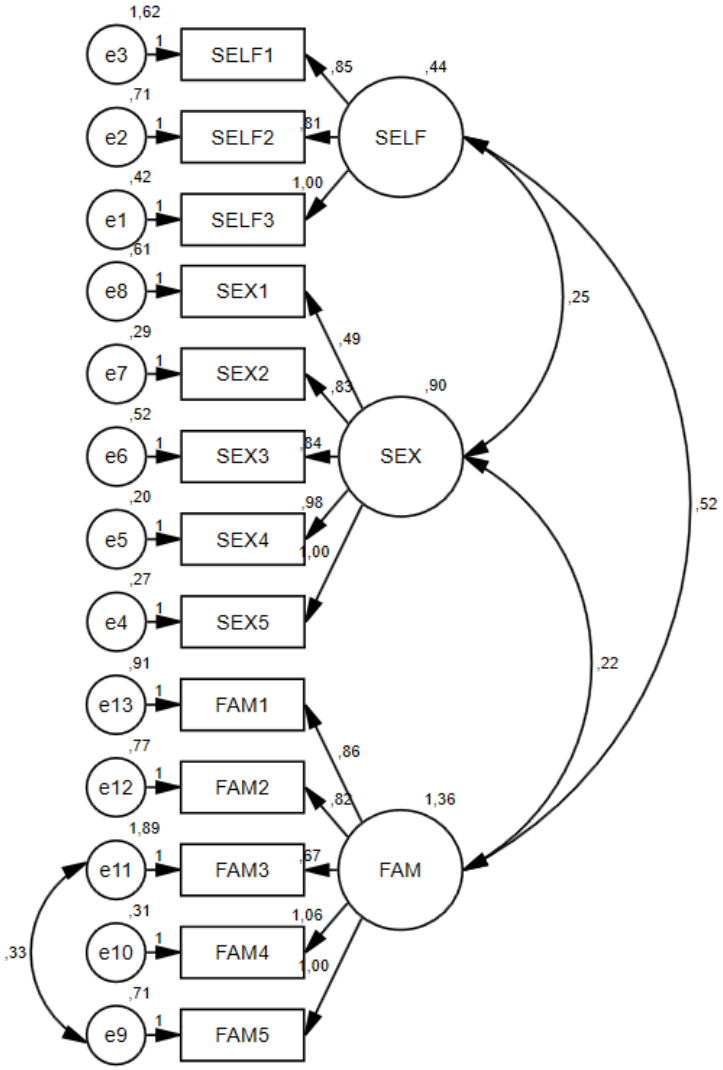

Figure 3.3 Confirmatory Factor Analyses for Marital Satisfaction (MS)

Note. SELF= self; SEX= sex; FAM= family All t values are significant at **p*<.001.

The calculated values from the confirmatory factor analyses performed on the Marital Satisfaction Scale were as follows [$\chi 2/df = 1.9$ ($p < .01$), CFI = .96, TLI = .95, RMSEA =.60, SRMR = .05, GFI = .93, and AGFI = .90] (Table 3.7). The modification indices were examined, and the error covariance of item 9 (living with my spouse's family is terrible for me.) and item 11 (it makes me unhappy that my spouse cannot say no to his family.) was freely. Following item examination, it became evident that there was a theoretical rationale for correlating the covariance of errors between these items, as they both assessed similar perceptions of family dynamics. The model fit better after the modification.

χ^2/df ratio was 1.9 which was within the range of suggested criteria of good fit, which is 3 (Kline, 2011). This approach helps mitigate the impact of sample size on the Chi-Square statistic, allowing for a more accurate assessment of model fit. TLI and CFI between .90 and .95 is acceptable (Hu & Bentler, 1999). GFI and AGFI values more than .80 signify an acceptable degree of fitness (Browne & Cudeck, 1993). The value of .05 for SRMR is acceptable as it is less than .08 (Hu & Bentler, 1999). For RMSEA, a value of .06 is considered .05 and .10 is a mediocre fit (Browne & Cudeck, 1993). Based on these analyses, it can be concluded that the factor structures in the original version of the inventory were validated for this study, indicating that the inventory demonstrates adequate validity.

Table 3.7 *Goodness of Fit Indices for Three- Factor Model of Marital Satisfaction*

	χ^2	*df*	χ^2/df	*CFI*	*TLI*	*RMSEA*	*SRMR*	*GFI*	*AGFI*
Model	117,107	61	1,9	.96	.95	.06	.05	.93	.90

*Note. *p< .001*

As shown in Table 3.8, standardized estimates ranging from .41 to .90 met the acceptability criteria. These values were deemed satisfactory as they surpassed the cutoff point of .30, a guideline advocated by Tabachnick and Fidell (2007).

Table 3.8 *Standardized Regression Weights and Squared Multiple Correlations of MS*

Construct	Item	Standardized Factor Loadings	Unstandardized Estimates	*t*	R^2
SELF	1	.41	.89	5.16	.17
	2	.54	1.00	6.41	.29
	3	.72	1.00		.51
SEX	1	.51	.87	8.65	.26
	2	.83	1.20	16.98	.68
	3	.74	1.12	14.22	.55
	4	.90	1.01	19.56	.81
	5	.87	1.03		.77
FAM	1	.72	.97	12.54	.52
	2	.73	.87	12.77	.54
	3	.50	1.14	8.91	.25
	4	.91	1.03	16.25	.83
	5	.81	1.00		.66

Note. SELF= self; SEX= sex; FAM= family All t values are significant at *p<.001.

3.3.1.6.2. Reliability Analyses of Marital Satisfaction Scale

Cronbach Alpha internal consistency coefficient was calculated to determine the reliability of the total Martial Satisfaction scale and its subscales. As a result of this analyses, the Cronbach Alpha internal consistency coefficient of the scale, which consists of 13 items and three factors, was calculated as .82 for the total scale, .55 for the self subscale, .88 for the sex subscale, .85 for the family subscale. According to the reliability ranking suggested by Cunha et al. (2016), marital satisfaction scale has high reliability, sex & family subscales have high reliability and self subscale has low reliability. When tested for the main study, the Cronbach alpha coefficient was found .83 for the total scale. Marital satisfaction scale has high reliability.

3.3.1.7. Demographic Form

The researcher created a demographic information form (Appendix F) to collect essential data regarding the individual and relational characteristics of the participants. This form included demographic details such as age, gender, education

level, and income, as well as relational characteristics such as family structure (nuclear & extended) duration of marriage, and presence of children.

3.4. Data Collection Procedure of the Main Study

In order to start data collection, firstly approval was obtained from the Human Research Ethics Committee of TED University (see Appendix A). After taking approval, data collection was started in early September 2023 and continued until November 2023. Since snowball (Biernacki & Waldorf, 1981) and purposive sampling (Bernard, 2002) techniques were used in this study, the individuals who voluntarily participated in the research were able to suggest their dual-career married friends to fill out the online questionnaire. The inclusion criteria for recruiting the sample of the main study were as follows: (a) being involved in a dual-career marriage, (b) being married for at least three months, and (c) living in Türkiye. Pilot data and main study data collection instruments were collected in Google Forms, online survey, and collected from participants online. A questionnaire including demographic form and questionnaires were prepared and shared on social media channels such as WhatsApp, Instagram, Telegram, Twitter and LinkedIn. Filling out the questionnaires was taken approximately 20-25 minutes. Couples participating in the research as spouses were not be asked for any identification, but were instead asked to write the same pseudonym as their spouses to match their data hich is necessary for conducting actor–partner interdependence mediator model.

In the study, since the data were collected on a voluntary basis, informed consent was obtained from each participant (see Appendix B). Participants filled in, respectively, the Demographic Form (Appendix F), Depression Anxiety Stress Scale (Appendix D), Dyadic Coping Inventory (Appendix C) and Marital Satisfaction Scale (Appendix E).

3.5. Data Analyses Procedure

The main aim of the current study was to test the mediating role of positive dyadic coping in the association between psychological symptoms and marital satisfaction. First of all, the initial processes of data screening and data cleaning on the raw data were completed. Afterwards, assumptions such as missingness, sample size, outliers,

normality, linearity, and multicollinearity were tested. In the second step, descriptive statistics were conducted to provide information about the individual and relational characteristics of the participants. Finally, the mediating role of positive dyadic coping in the association between psychological symptoms and marital satisfaction was examined via The Actor–Partner Interdependence Model (Kashy & Kenny, 2000). Preliminary analyses were done with SPSS Version 2. Finally, confirmatory factor analyses and path analyses were performed with AMOS 24 (Arbuckle, 2016).

3.5.1. Overview of the Actor-Partner Interdependence Model (APIM)

Dyadic research offers a suitable method for exploring in-depth the concepts of "similarity," "difference," "reciprocity," "complementarity," and "interdependence" within the dynamics of relationships (Kenny, 1996). The Actor-Partner Interdependence Model (APIM) stands out as a widely utilized framework for gathering and analyzing dyadic data (Kenny, 1996). This method enables researchers to test the statistical equivalence of effects between dyad members, assessing whether observed actor and partner effects significantly differ across dyad members (Kenny, Kashy, & Cook, 2006). Given that each member of a dyad affects the outcomes of the other, the study employed the Actor-Partner Interdependence Mediation Model (APIMeM), an extension of APIM (Ledermann et al., 2010). APIMeM facilitates the examination of individuals' predictors and mediators' effects on both their own outcomes (actor effects) and their partner's outcomes (partner effects). The model comprises two exogenous and two endogenous variables, connected by two mediator variables (Landis et al., 2013). Specifically, in the context of the present study, the interpersonal impact of psychological symptoms on the partner's marital satisfaction (partner effect) and on one's own marital satisfaction (actor effect) through the mediating role of positive dyadic coping is the focus of investigation.

3.6. Limitations of the Study

In addition to its possible contributions to the literature, this study also has some limitations. The first limitation of this study is that the findings are subject to common method bias due to the use of self-report measurement instruments.

Participants were asked to rate their psychological symptoms, dyadic problem solving, and marital satisfaction. For some couples, it can be challenging to confront psychological symptoms, as well as the extent to which they are satisfied with their marriage and the extent to which they cope with stress as a couple. Therefore, participants may tend to hide some information about their relationship dynamics or individual psychological processes and give socially desirable answers.

Secondly, despite APIM (Actor-Partner Interdependence Model) framework's use in the present study, its cross-sectional nature prevents any arguments on the causal directions of psychological symptoms, positive dyadic coping, and marital satisfaction. Another limitation of this study is that purposive and snowball sampling techniques were used in this study. Although these techniques were useful for reaching populations with certain characteristics, they included samples with similar socio-cultural structures. Therefore, the results of the current study can be generalized to highly educated, dual-career married couples with similar characteristics to the sample of the current study.

The last limitation is that the data were collected through an online survey. Participants were able to participate in the study from their own smartphones or computers. However, people who did not have internet access or whose internet usage skills were not sufficiently developed could not fill out these scales. That's why those people could not be reached.

CHAPTER 4

RESULTS

This section provides an overview of the statistical analysis conducted in the main study. Firstly, the results of preliminary analyses were presented, which included data screening to identify missingness, influential outliers, and ensuring sample size adequacy. Furthermore, assumptions necessary for further analyses, such as normality, linearity, homoscedasticity, multicollinearity, distinguishability, and non-independence, were assessed. Following the preliminary analyses, descriptive analyses were conducted to delineate the characteristics of dual-career married couples, and the association among variables were investigated separately for wives and husbands. Subsequently, the hypotheses were tested by using Actor Partner Interdependence Mediation Model (APIMeM). Lastly, a concise summary of the results is provided.

4.1.1. Data Screening Prior to Analyses

Before conducting the analyses, review of various assumptions were performed to ensure that the data met the necessary prerequisites for the planned analyses. These checks included consideration of outliers, adequacy of sample size, assumptions of normality, linearity, and homoscedasticity, multicollinearity, distinguishability of the dyad members, and non-missingness. While collecting data, no missing data were encountered as each question had to be answered in order to move on to the next question.

4.1.1.1. Influential Outliers

Tabachnick and Fidell (2007) describe univariate outliers as instances where there is an unusual value on a single variable. They define multivariate outliers as instances where there is an uncommon combination of values across two or more variables. In this study, standard z scores were used to explore the impact of outliers. Tabachnick and Fidell (2007) classify situations falling below -3.29 or above +3.29 as outliers. However, for variables like marital satisfaction, positive dyadic coping, and

psychological symptoms, there were no cases that fell beyond these thresholds. To identify multivariate outliers, Mahalanobis distances were assessed following the methods outlined by Kline (2011), and Tabachnick and Fidell (2007). The analyzes did not reveal any instances of outliers falling below .001.

4.1.1.2. Sample Size Adequacy

There are multiple guidelines available for determining an appropriate sample size when conducting path analyses in AMOS. According to Kline (2011), at least 200 participants are recommended for path analyses in AMOS. Tabachnick and Fidell (2007) suggest a formula to determine the sufficient sample size N > 50 + 8m (m = number of independent variables). This study was conducted with 120 couples (*n* = 240), and meets this criterion of sample size.

4.1.1.3. Normality

Skewness and kurtosis values were utilized to examine the assumption of univariate normality. Kline (2011) stated that keeping the skewness and kurtosis coefficients between -3 and +3 indicates that the distribution is normal. In the present study, it was observed that both the kurtosis and skewness coefficients fell within the expected range, specifically between -3 and +3 (Table 4.1). Parametric methods are used in the analyses of studies where data show normal distribution (Kul, 2014). For this reason, the research continued with parametric tests.

Table 4.1 *Descriptive Statistics, Skewness, and Kurtosis Values*

	Scales	Skewness	Kurtosis
Positive Dyadic Coping	Self-emotional-focused support	-.935	-.050
	Partner emotional-focused support	-1.039	.550
Positive Dyadic Coping	Problem-focused dyadic coping	-.542	-.262
	Self-problem-focused support	-.795	.429
	Partner problem-focused support	-.986	.273
	Delegated dyadic coping by oneself	-.766	.471
	Delegated dyadic coping by partner	-.611	-.222

Table 4.1 (continued)

	Scales	Skewness	Kurtosis
	Emotional-focused dyadic coping	-.376	-1.044
	DASS-21	.530	-.477
	Marriage Satisfaction	-1.190	.970

4.1.1.5. Linearity and Homoscedasticity

Hair et al. (2010) describes linearity as a premise that evaluates the linear correlation between scores, a prerequisite for correlational analyses, while homoscedasticity is defined as the assumption that dependent variable(s) exhibit uniform variance levels across predictor variables. A partial regression residual plot was used to check the linearity assumption. Residual pilots were examined, revealing an almost elliptical shape, depicting that the dependent variable displayed consistent variance across the range of independent variables. Therefore, the linearity assumption was met (Stevens, 2009). Furthermore, bivariate scatterplots were examined, and their oval shape indicated homogeneous distribution of variances of the variables (Hair et al., 2010).

4.1.1.6. Multicollinearity

Tabachnick and Fidell (2007) emphasize that when independent variables show a stronger correlation than anticipated, multicollinearity might pose an issue. Therefore, the multicollinearity assumption was assessed (Table 4.3). To address this, the study examined the presence of multicollinearity by assessing bivariate correlation coefficients, tolerance values, and VIF (variance inflation factor). Correlation coefficients being below .85 (Kline, 2011), tolerance values being greater than .20, and the number of VIF (variance inflation factor) values being less than .10 (Tabachnick & Fidell, 2007) are indicators of the multicollinearity. VIF values all fell below 10, ranging from 1.27 to 1.56, while tolerance values ranged from .61 to .79 meeting the criterion of being higher than .20. Consequently, the findings indicate no evidence of multicollinearity among the independent variables (wives' and husbands' psychological symptoms; r = .33).

4.1.1.7. Distinguishability of the Dyad Members

An essential aspect of dyadic research and the application of APIM revolves around determining whether the members of a dyad are distinguishable or indistinguishable (Kenny et al. 2006). The two dyads must be able to be assigned to two distinct groups for valid reasons in order to be referred to be "distinguishable." Examples of identifiable dyad members are husband and wife, mother and child. The sample for the current study consisted of dual-career married couples. The information was collected from distinguishable dyad members, namely husbands, and wives.

4.1.1.8. Nonindependence

Although most statistical analyzes appear to select a sample randomly from a population, dyadic relationships sampling may violate this assumption (Fitzpatricket al., 2016). Kenny et al. (2006) recommends calculating Pearson product-moment correlation coefficients to test the nonindependence of observation for the variables examined. Kashy and Kenny (2000) state that a couple in a relationship is not two independent individuals, they share common things. Pearson product-moment correlation coefficients was calculated as shown in Table 4.3 as suggested. Correlation results showed that partners' psychological symptoms ($r = .33$, $p < .01$), positive dyadic coping ($r = .48$, $p < .01$), and marital satisfaction ($r = .50$, $p < .01$) were correlated among dyads, indicating nonindependence in each of the variables.

4.2. Descriptive Statistics

This section provides descriptive statistics for the main study variables, such as means, standard deviations, and ranges. In addition, correlations between variables are given. These are shown in Table 4.2 and Table 4.3, respectively.

4.2.1. Means, Standard Deviations, and Gender Differences on the Main Study Variables

T-tests were conducted to examine the gender differences in the main study variables (Table 4.2). The difference between women ($M = 21.88$, $SD = 12.59$) and men ($M = 16.29$, $SD = 12.07$) on psychological symptoms was found statistically significant,

t(240) = 3.51, *p* = .001; women had higher scores than men. The difference between women's marital satisfaction (*M* = 54.43, *SD* = 9.21) and men's marital satisfaction (*M* = 55.94, *SD* = 8.21) was not found to be statistically significant, *t*(240) = -1.34, *p* = .18. Moreover, the difference between women's dyadic coping (M = 74.67, SD = 12.61) and men's dyadic coping (*M* = 75.73, *SD* = 13.41) was not statistically significant, *t*(240) = -.63, *p* = .53.

Table 4.2 *T-tests Results Comparing Wives and Husbands on Main Study Variables*

	Wives		Husband			
	N= 120		N= 120			
	M	*SD*	*M*	*SD*	*F*	*t-test*
Marital Satisfaction	54.43	9.21	55.94	8.21	2.30	-1.34
Positive Dyadic Coping	74.67	12.61	75.73	13.41	.069	-.63
Psychological Symptoms	21.88	12.59	16.29	12.07	.43	3.51**

Note. ***p*< .05.

4.2.2. Bivariate Correlations

Pearson product-moment correlation coefficients were computed to examine the associations among the main variables investigated in the study. The associations among the predictor (psychological symptoms), mediator (positive dyadic coping), and the criterion variable (marital satisfaction) were analyzed. Correlation coefficients for the study variables were computed independently for wives and husbands. These results are detailed in Table 4.3.

Field (2005) dictated the cut off points of strength of correlations as follows ±.10 indicates a small correlation; ±.30 suggests a medium correlation; ±.50 indicates a large correlation. The size of the correlations among the study variables was equivalent to expectations for both wives and husbands, as noted in Table 4.3. In the current study, no multicollinearity was seen for either partner.

Correlation analyses revealed that there were no significant relationships between wives' psychological symptoms and husbands' positive dyadic coping (r = -.09); wives' psychological symptoms and husbands' marital satisfaction (r = -.13). Except for these, both wives' and husbands' psychological symptoms were significantly correlated to each other (see Table 4.3). There was a significant, positive, and a medium relationship between wives' psychological symptoms and husbands' psychological symptoms (r = .33, p < .01). Moreover, there was a significant, positive, and a medium relationship between wives' positive dyadic coping and husband' positive dyadic coping (r = .48, p < .01). There was a significant, negative, and a medium relationship between wives' positive dyadic coping and husbands' psychological symptoms (r = -.35, p < .01). Furthermore, there was a significant, negative, and a small relationship between wives' psychological symptoms and husband' marital satisfaction (r = -.13, p < .01). The results also depicted a significant, positive, and a small relationship between wives' marital satisfaction and husband' positive dyadic coping (r = .25, p < .01). In addition, there was a significant, negative, and a medium association between wives' marital satisfaction and husband' psychological symptoms (r = -.30, p < .01). There was a significant, positive, and a large relationship between wives' marital satisfaction and husband' marital satisfaction (r = .49, p < .01).

Table 4.3 *Bivariate Correlations between Study Variables*

	1	2	3	4	5	6
1.PDC_W	1					
2.DASS _W	-,28**	1				
3.MS_W	,44**	-,42**	1			
4.PDC_H	,48**	-,09	,25**	1		
5.DASS_H	-,35**	,33**	-,30**	-,39**	1	
6.MS_H	,45**	-,13	,50**	,60**	-,46**	1

Note. PDC_H= Husbands' Positive Dyadic Coping, MS_W= Wives' Marital Satisfaction, DASS_W= Wives' Depression Anxiety Stress, PDC_W= Wives' Positive Dyadic Coping, DASS_H= Husband' Depression Anxiety Stress; MS_H= Husband' Marital Satisfaction. **p<.01.

There was a significant, negative, and a medium relationship between wives' psychological symptoms and their positive dyadic coping (r = -.28, p < .01). Moreover, there was a significant, negative, and a medium relationship between wives' positive dyadic coping and their marital satisfaction (r = .44, p < .01). The results also depicted a significant, negative, and a medium relationship between wives' psychological symptoms and their marital satisfaction (r = -.42, p < .01). Furthermore, there was a significant, negative, and a medium relationship between husbands' psychological symptoms and their positive dyadic coping (r = -.39, p < .01). There was a significant relationship between husbands' positive dyadic coping and their own marital satisfaction (r = .60, p < .01). In addition, there was a significant, negative, and a medium relationship between husbands' psychological symptoms and their marital satisfaction (r = -.46, p < .01).

4.3. Testing the Main Hypotheses

The study aims to explore the mediating role of positive dyadic coping in the association between psychological symptoms and marital satisfaction in dual-career married couples living in Türkiye. APIMeM was utilized to examine the aforementioned model of the study with distinguishable partners (i.e., wives & husbands).

The mediating role of positive dyadic coping between psychological symptoms and marital satisfaction were investigated via APIMeM. Psychological symptoms were the predictive variable, positive dyadic coping was the mediator variable, and marital satisfaction was the outcome variables. Correlations among independent variable (psychological symptoms) and correlated errors between the mediating variable (positive dyadic coping) and outcome variable (marital satisfaction) were added into the model. In line with the recommendations of Kenny et al. (2006), firstly saturated model was explored. All paths from predictor variables to outcome variables were checked and removed from the model until the paths were significant. Therefore, there were only significant paths in the final model.

4.4. Mediating Role of Positive Dyadic Coping in Association between the Psychological Symptoms and Marital Satisfaction

The proposed model suggested that positive dyadic coping will mediate in the association between psychological symptoms and marital satisfaction. First of all, non-significant paths were removed from the model in order to test a saturated model that included all the paths from marital satisfaction to positive dyadic coping and marital satisfaction, and from positive dyadic coping to marital satisfaction. The final model was given in Figure 4.1. As a result, the goodness of fit indices fit the data of this model very well (see Table 4.4) (χ^2/df = 2.37, p = .04, GFI = 1.00, AGFI = .87, TLI = .89, CFI = .97, RMSEA = .10, SRMR = .00).

Table 4.4 *Fit Indices of APIMeM Model*

	χ^2/df	CFI	TLI	RMSEA	SRMR	GFI	AGFI
Model 1	0	1.00	-	.33	.00	1.00	-
Model 2	2.37	.97	.89	.10	.00	1.00	.87

The amount of variance explained by the proposed model was assessed through the squared multiple correlations (R^2) of the mediator variables (wives' positive dyadic coping and husbands' positive dyadic coping) and the outcome variables (wives' marital satisfaction and husbands' marital satisfaction). The findings indicated that wives' and husbands' psychological symptoms account for 9% of the variance in husbands' positive dyadic coping, 8% of the variance in wives' positive dyadic coping, 39% of the variance in husbands' marital satisfaction, and 30% of the variance in wives' marital satisfaction.

Below, the direct and indirect effects of the independent variables (wives' psychological symptoms, husbands' psychological symptoms), mediator variables (wives' positive dyadic coping, husbands' positive dyadic coping) and outcome variables (wives' marital satisfaction, husbands' marital satisfaction) were reported. The direct, and indirect effects for the proposed model were conducted with mediators (for wives' psychological symptoms: β = -.23, p < .01; for husbands' psychological symptoms: β = -.17, p < .01), and without mediators (for wives'

psychological symptoms: β = -.27, p < .01; for husbands' psychological symptoms: β = -.32, p <.01). In this step, bootstrapping, a commonly employed method for testing the significance of effects, was carried out (Bollen & Stine, 1990). Additionally, Cohen's guidelines (1998) were used to interpret beta coefficients, where correlations falling between .10, and .29 were labeled as small, .30, and .49 as moderate, and .50 and 1.00 as large.

4.4.1. Actor Effects

There were direct actor effects among psychological symptoms, dyadic coping and marital satisfaction (see Table 4.5). Specifically, wifes' psychological symptoms predicted their own positive dyadic coping, and marital satisfaction (β = -.28, p < .01; β = -.25, p < .01, respectively). Moreover, husbands' psychological symptoms predicted their own positive dyadic coping and marital satisfaction (β = -.32, p < .01; β = -.15, p < .01, respectively). Additionally, both wives', and husbands' positive dyadic coping positively predicted their marital satisfaction, with relatively low effects (β = .25, p < .01; β = .25, p < .01). These results suggest that wives and husbands are more likely to have their psychological symptoms reduced via positive dyadic coping, which in turn will increase their marital satisfaction.

4.4.2. Partner Effects

There was also one partner effect. Specifically, wives' positive dyadic coping positively predicted husbands' marital satisfaction (β = .12, p < .05), although it showed a low effect. That is, wives' positive dyadic coping mediated the effect of wives' psychological symptom on their own marital satisfaction. Secondly, the indirect effect of husbands' psychological symptoms on their marital satisfaction via positive dyadic coping was significant and negative, β = -.05, p < .05, [CI -.12, -.01]. That is, husbands' positive dyadic coping partially mediated the effect of husband' psychological symptoms on their own marital satisfaction.

Table 4.5 *Actor and Partner Effects of Psychological Symptoms and Positive Dyadic Coping in Marital Satisfaction*

Effects		B	SE	*t*	*p*	*β*
Psychological Symptoms	Positive Dyadic Coping					
	Wives' Actor Effect	-.28	.08		.001***	-28
	Husbands' Actor Effect	-.29	.09		.001***	-32
Positive Dyadic Coping	Marital Satisfaction					
	Wives' Actor Effect	.34	.06		.001***	.25
	Husbands' Actor Effect	.41	.05		.001***	.25
Psychological Symptoms	Marital Satisfaction					
	Wives' Actor Effect	-.33	.05		.001***	-.25
	Husbands' Actor Effect	-.23	.05		.001***	-.15
Partner Effects						
Positive Dyadic Coping	Positive Dyadic Coping					
	Wives' Partner Effect	.19	.05		.01*	.12
	Husbands' Partner Effect	-	-	-	-	-

Note. *p<.05, **p<.01, ***p<.001

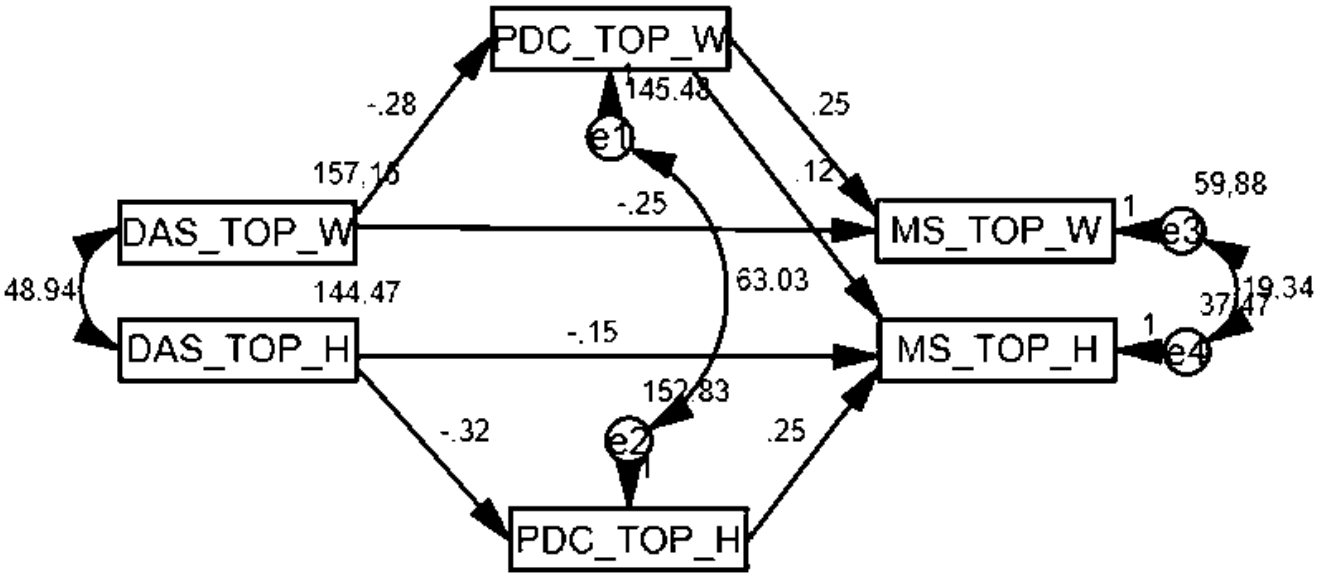

Figure 4.1 Structural Model Using Positive Dyadic Coping as Mediator, Psychological Symptoms as The Predictor Variables, Marital Satisfaction As Outcome Variable

Note: DAS_TOP_W= Wifes' Psychological Symptoms; DAS_TOP_H= Husbands' Psychological Symptoms; PDC_TOP_W= Wifes' Positive Dyadic Coping; PDC_TOP_W= Husbands' Positive Dyadic Coping; MS_TOP_W: Wifes' Marital Satisfaction; MS_TOP_H: Husbands' Marital Satisfaction

4.5. Hypotheses Testing

The aim of this study is to examine the mediating role of positive dyadic coping in the association between psychological symptoms and marital satisfaction at a dyadic level. Based on this, the detailed hypotheses outlined in the introduction are elaborated as follows:

Hypothesis 1 (H1): Psychological symptoms will have a significant negative actor effect on marital satisfaction. This hypothesis was confirmed for both wives (β = -.25, $p < 0.01$) and husbands (β = -.15, $p < 0.05$).

Hypothesis 2 (H2): Positive dyadic coping will have a significant positive actor effect on marital satisfaction. *This hypothesis was confirmed for both wives (β = .25, $p < 0.01$) and husbands (β = .25, $p < 0.01$).*

Hypothesis 3 (H3): Psychological symptoms will have a significant negative partner effect on marital satisfaction. This hypothesis wasn't be confirmed. No significant negative partner effects of psychological symptoms on marital satisfaction were found.

Hypothesis 4 (H4): Positive dyadic coping will have a significant positive partner effect on marital satisfaction. *This hypothesis was confirmed for wives (β = .12, $p < 0.01$). On the other hand, no significant positive partner effects of husbands' positive dyadic coping on wives' marital satisfaction were found.*

Hypothesis 5 (H5): Positive dyadic coping will mediate the relationship between psychological symptoms and marital satisfaction. It was found that while the husbands' psychological symptoms negatively predicted their own marital satisfaction without mediation (β = -.32, $p < 0.05$), this effect decreased with mediation (β = -.15, $p < 0.05$). While the wives' psychological symptoms negatively predicted their own marital satisfaction without mediation (β = -.27, $p < 0.05$), this effect decreased with mediation (β = -.25, $p < 0.05$).

4.6 Summary of the Findings

Overall APIMeM results yielded that psychological symptoms had a negative actor effect on marital satisfaction in addition to two indirect effects through positive dyadic coping, for both dyads. To explain, positive dyadic coping of wives partially mediated the association between wives' psychological symptom and marital satisfaction. Additionally, positive dyadic coping of husbands partially mediated the association between husbands' psychological symptom and marital satisfaction.

CHAPTER 5

DISCUSSION

First, this chapter will cover the discussion of the findings of the main study. Moreover, the results obtained from the research results will be included. Finally, suggestions for further research and practical applications will be presented.

5.1. Discussion of the Findings

While women's entry into business life has supportive effects on marriage dynamics, the difficulties they face in balancing work and family responsibilities can also bring about conflicts (Duxbury, 2003; Edwards & Rothbard, 2000; Gorissen, 2009; Hall & Hall, 1979; Soysal, 2009). Additionally, these conflicts between couples lead to a decrease in job satisfaction (Kossek & Ozeki, 1998), a decrease in marital satisfaction (Landis et al., 2013), and a decrease in life satisfaction (Bartley et al., 2013). Moreover, mood at work extends beyond the work area and affects mood at home, so job satisfaction may be related to marital satisfaction (Judge and Ilies 2004). In addition to this information, it has been proven that the coping strategies used by married individuals can change their relationships with their partners, their marital satisfaction, and their coping with the problems they experience in their marriage (Goh et al., 2011). One of these strategies is dyadic coping. Considering that coping with stress as a couple is very valid for the healthy functioning of marriage, the researcher consulted the literature on the basic structures of dyadic coping to understand how dual-career married couples can increase marital satisfaction despite psychological symptoms. As a result of the literature review, it was found that there is a strong positive relationship between positive coping and marital quality (Bodenmann et al., 2006).

To the researcher's knowledge, no research has been conducted examining the mediating role of positive dyadic coping in the association between psychological symptoms and marital satisfaction in dual-career married couples. Therefore, in this study, the model examining the mediating role of positive dyadic coping in the association between psychological symptoms and marital satisfaction was tested. In

this study, psychological symptoms of both wives and husbands were included as predictor variable, and marital satisfaction of both wives and husbands was determined as an outcome variable, and positive dyadic coping was determined as a mediating variable. To achieve the purpose of the study, the data were analyzed via the Actor Partner Interdependence Mediation Model (APIMeM). In general, the results revealed that there are various actor and partner effects among the variables. Essentially, wives' and husbands' psychological symptoms have been found to be directly and negatively related to their own marital satisfaction. Wives' positive dyadic coping was found to be positively related to their husbands' marital satisfaction. Additionally, it was observed that positive dyadic coping separately mediated the relationship between psychological symptoms and marital satisfaction.

5.1.1 Discussion of Actor Effects

As stated in Hypothesis 1, a higher level of psychological symptoms was associated with lower levels of marital satisfaction, where contrary is possible too. That is, both wives'' and husbands' psychological symptoms have significant actor effects on marital satisfaction.

To the knowledge of the researcher, only one study (Renshaw et al., 2008) was found in the international literature examining the association between psychological symptoms and marital satisfaction. This study focused on the partner effect (Renshaw et al., 2008). Therefore, studies supporting the hypothesis have been based on studies related to depression, anxiety, and stress, which are defined as the most common psychological symptoms (Taghva et al., 2014).

These findings echo the results of Bookwala and Jacobs' (2004) study, which indicated that depressive affect strongly predicts marital satisfaction among older adults but not younger adults. Similarly, Pruchno et al. (2009) examined the longitudinal relationships between depressive symptoms and marital satisfaction in 315 patients with end-stage renal disease and their spouses over a 2-year period, revealing that both patients' and spouses' average and time-varying depressive symptoms are influenced by their own marital satisfaction. In addition, Dimitrovsky et al. (2002) demonstrated a negative relationship between depression and marital

satisfaction in their study involving 100 pregnant women and 50 non-pregnant women. Moreover, Davila et al. (2003) showed bidirectional relationships between depressive symptoms and marital satisfaction among 164 couples married for 4 years, indicating that changes in marital satisfaction led to changes in depressive symptoms and vice versa. The findings also supported the Turkish literature. Öztahtacı (2017) demonstrated a significant negative relationship between depression and marital satisfaction in a sample of 340 married women. Similarly, the study conducted by Öz and Tatar (2020), consisting of 202 women and 202 men, shows that there is a weak and negative relationship between depression and marital satisfaction, and that marital satisfaction tends to decrease as depression levels increase.

Similar to depression, it has been proven by different studies (Dehle & Weiss, 2002; Kasalova et al., 2018; Whisman et al., 2004) that anxiety has a negative relationship with marital satisfaction and marital functions. Kasalove et al. (2018) argued that high levels of anxiety and depression symptoms are associated with low levels of marital satisfaction. Moreover, the study of Tarı (2022) is consistent with international literature. However, it has been stated that marital satisfaction has a higher negative relationship with depression (Tarı, 2022). This finding can be explained in different ways. An individual with symptoms of depression may have a negative worldview, including a negative view of his or her partner and relationship. The thoughts of an individual experiencing symptoms of anxiety may focus around the expectation of harm or failure, but they may not evaluate their relationship or partner from a negative and critical perspective as much as the person experiencing symptoms of depression (Whisman et al., 2004).

Stress has also been found to have a negative association between marital satisfaction in different studies (Fallahchai et al., 2019; Yogev, 1986). The factors that create stress vary (Stranks, 2005), but the current study focused specifically on the stress symptoms of dual-career married couples and its reflections on marriage. A study conducted by Fallahchai et al. (2019) with 206 dual-career married couples revealed a negative relationship between job stress and marital quality. In particular, the negative association between job stress and marital satisfaction can be explained

as follows. The demands of maintaining a dual-career lifestyle often bring challenges such as role tension, stress, conflicting demands, and excessive workload (Blumenstein & Swartz, 1983). The difficulties that dual-career couples face in balancing work and family responsibilities may also lead to family conflicts (Duxbury, 2003; Edwards & Rothbard, 2000; Schulz et al., 2004). It is important for couples to consider ways to use dyadic coping techniques that can prevent the detrimental effects of stress on relational well-being (Merz, et al., 2014; Randall & Bodenmann, 2017). Additionally, when dual-career married couples do not use in this technique effectively, they may experience a decrease in job satisfaction and career success (Kossek & Ozeki, 1998), a decrease in marital satisfaction (Landis et al., 2013), an increase in stress levels (Landis et al., 2013), and a decrease in life satisfaction (Bartley et al., 2007). In addition to the difficulty of establishing a work-family balance within the family, it can also be difficult to manage only job stress, and it has been proven that unmanaged job stress can also affect the family due to stress spillover and crossover (Neff & Karney, 2005). Stress spillover refers to how stress experienced in one aspect of life, such as a job, spreads by causing stress in another aspect, such as a spouse or family (Geurts & Demerouti, 2003; Schaer et al., 2008). Stress spillover can lead to destructive behaviors between partners (Schulz, Cowan, Pape Cowan, & Brennan, 2004), and as a result, these destructive behaviors can negatively affect marital satisfaction (Randall & Bodenmann, 2017). In conclusion, the findings show that, consistent with other research findings in the literature, psychological symptoms (i.e., depression, anxiety, and stress) are an important predictor of marital satisfaction for dual-career married couples.

As stated in Hypothesis 2, a higher level of positive dyadic coping was associated with higher levels of marital satisfaction. That is, both wives' and husbands' positive dyadic coping has significant actor effects on marital satisfaction.

Burke and Weir (1975), reported significant relationship between positive dyadic coping and marital satisfaction. Similarly, in a study conducted by Hilpert et al. (2016), consisting of 7973 married individuals from 35 different countries, it was revealed that positive dyadic coping had a significant and positive relationship with

marital satisfaction. Moreover, compared to other couples in the same country, couples who perceived more support from their partners reported higher levels of marital satisfaction overall. When couples use positive dyadic coping techniques in their relationships, they also report higher use of effective individual coping strategies and, as a result, higher life satisfaction and lower psychological distress (Falconier and Khun, 2019). In fact, when married couples use positive dyadic coping, the level of continuity and satisfaction in their marriage will tend to increase, as couples use more constructive language instead of accusatory language towards their spouses when coping with stress and tend to cause less damage to their relationships in the face of problematic situations (Falconier & Khun, 2019). Thus, positive dyadic coping techniques are considered the most important determinants of marital satisfaction (Vedes et al., 2013). In conclusion, the findings show that, consistent with other research findings in the literature, positive dyadic coping is an important predictor of marital satisfaction for wives and husbands separately.

5.1.2 Discussion of Partner Effects

As proposed in Hypothesis 3, psychological symptoms had a significant partner effect on marital satisfaction; that is, as the wives' psychological symptoms increased, their husbands' marital satisfaction decreased. As well, as the husbands' psychological symptoms increased, their wives' marital satisfaction decreased. This hypothesis wasn't confirmed. No significant negative partner effects of psychological symptoms on marital satisfaction were found in the current study.

Contrary to the partner effect stated in the current study, some studies found partner effects of depression, anxiety, and stress on marital satisfaction and marital functions. In a study conducted by Whisman et al. (2004) with 779 couples, the association between depression and anxiety levels and marital satisfaction was examined. The results of the study showed that marital satisfaction was predicted by the individual's own anxiety and depression level (e.g., actor effects) and only by his or her spouse's depression level (e.g., partner effects). Moreover, while a person's own depression score was significantly associated with lower marital satisfaction in

their partner, the study's findings found no partner effects for anxiety. These findings are consistent with previous studies showing that depression is associated with lower satisfaction with a partner (Benazon & Coyne, 2000; Coyne et al., 2002). Coyne et al. (1987) reported that people living with a person showing symptoms of depression feel responsible in various ways and become upset because of the person's depression symptoms, and this process reflects negatively on the relationship. In addition to anxiety and depression, it has been supported by different studies (Anafarta, 2011; Efeoğlu & Ozcan, 2013; Šimunić & Gregov, 2012) that wives' psychological symptoms had a significant partner effect on husbands' martial satisfaction or husbands' psychological symptoms had a significant partner effect on wives' martial satisfaction. Fallahchai et al. (2019) found that the result was the same for the sample group of dual-career married couples.

As proposed in Hypothesis 4, wives' positive dyadic coping had a significant partner effect on husbands' martial satisfaction; that is, as the positive dyadic coping of wives increased, their husbands' marital satisfaction increased as well.

Donata et al. (2021) proved that one's perception of the other's dyadic coping responses mediates its effect on one's satisfaction. The role of support that couples provide to each other in reducing stress can be explained as follows, suggesting that positive dyadic coping can limit cortisol levels and regulate stress when individuals receive support from their partners before stress occurs (e.g., Ditzen et al., 2007; Heinrichs et al., 2003). In addition, Fallahchai et al. (2019) found that with 206 heterosexual dual-career couples, partners who perceived more supportive dyadic coping reported higher marital quality. This may be explained by the fact that when one or both spouses are faced with a stressful situation, using positive dyadic coping and seeing the stress as a dual stress (that is, "our stress") has positive effects on the marriage process as it creates a feeling of "we-ness" within the couple (Vedes et al., 2015). Moreover, Wunderer and Schneewind's (2008) findings differed from those of this study. In their research with 663 German married couples, they found that wives' marital satisfaction depends more on support from their husbands than vice versa. Gender differences in self-concept, with women often possessing a more

relational self-concept than men, may explain this phenomenon (Kirkpatrick & Davis, 1994; Vangelisti, 1997). Therefore, this finding needs further examination.

5.1.3 Discussion of Mediation Effects

In this study, it was hypothesized that positive dyadic coping mediates the relationship between wives' and husbands' psychological symptoms and couples' marital satisfaction (H5). Actor effects revealed two significant mediations in this study. Husbands' positive dyadic coping mediates the effect of husbands' own psychological symptoms on their marital satisfaction. Wives' positive dyadic coping mediates the effect of wives' own psychological symptoms on their marital satisfaction.

Consistent with the findings, Genç et al. (2021) observed a significant indirect effect in their study with 233 participants, showing that perceived dyadic coping mediated the relationship between COVID-19 distress and relationship satisfaction for both men and women. Another study reflecting results consistent with Hypothesis 5 is Landis et al.'s (2013) study, which concluded that older adults' dyadic coping effectively balances relationship satisfaction against the challenges of advanced age and long-term marriage. According to Bodenmann (2000), individuals under stress tend to speak more critically, humiliatingly, combatively, and oppressively to their spouses. As a result, this situation may cause the dysfunction of the marriage to deteriorate (Story & Bradbury, 2004). In order to prevent this situation, it is emphasized that the negative effects of stress on the couple relationship can be reduced with adequate individual and couple coping skills (Bodenmann & Shantinath, 2004). Moreover, in the study conducted by Wunderer & Schneewind (2008) with 663 participants, positive dyadic coping exhibited during stressful conditions proved to play a mediating role between permanent vulnerabilities and marital satisfaction. In addition, Fallahchai et al. (2019), with 206 dual-career couples, proved that perceived partner-supportive dyadic coping moderates the association between job stress and marital quality. Falconier et al. (2015) found that supportive dyadic coping was found as a potential mediator of the relationship between job stress and marital satisfaction, as well as between marital sanctity and well-being. This situation is explained from Bodenman's (2016) perspective as

follows that it is a risk for the relationship if one or both spouses bring stress home from the workplace or another area, because the partner under stress may become reactive and aggressive and initiate conflict in the relationship. Therefore, in order to establish a positive relationship between spouses, it is of great importance to know how each spouse individually copes with stress and their dyadic coping strategies (Bodenmann, 2016). Otherwise, the consequences of unmanaged stress pose an obstacle to marriage.

5.2. Conclusion

This study aimed to investigate the mediating role of positive dyadic coping in the association between psychological symptoms and marital satisfaction in dual-career married couples living in Türkiye. In this context, actor and partner effects were investigated. As a result, it was understood that psychological symptoms had a significant negative actor effect on marital satisfaction. Additionally, positive dyadic coping has been proven to have a significant positive actor effect on marital satisfaction. Moreover, it was understood that psychological symptoms did not have partner effect on marital satisfaction. It was concluded that wives' positive dyadic coping had a significant positive partner effect on their husbands' marital satisfaction. Finally, husbands' positive dyadic coping was mediate the association between husbands' psychological symptoms and their own marital satisfaction. In addition, wives' positive dyadic coping was mediate the association between wives' psychological symptoms and their own marital satisfaction.

5.3. Implications

In this section, theoretical and practical implications are presented, respectively.

5.3.1. Theoretical Implications

Based on theoretically different models, dyadic coping, in terms of the systematic transactional model (STM; Bodenmann & Randall, 2017), provides a systematic conceptualization of the processes used by partners to cope with stressors. Dyadic coping specifically assesses stress communication, individual strategies to help the other partner cope with stress, and partners' common coping strategies. (Falconier et

al., 2015). According to the model, since stressors directly or indirectly affect both partners in an intimate relationship, the stress reactions and coping methods of one also affect the other. Therefore, it is argued that positive dyadic coping is a strategy that couples should have for relationship satisfaction and relationship quality (Ledermann et al., 2010). Moreover, STM emphasizes interdependence and mutually between partners. This means that if the partner cannot cope with the stress, he/she experiences at work by using appropriate coping methods, it will have a negative impact on the marriage process (Randall & Bodenmann, 2009). It has been proven by a study that the stress experienced in business life affects both couples (Fallahchai et al., 2019). However, apart from this study, there is a large gap in the literature for the selected sample group. For this reason, dual-career married couples were selected as the sample group of this study.

When the literature is examined, the studies conducted in Türkiye are quite limited (Aydoğan & Özbay, 2018; Genç et al., 2021; Kurt & Akbaş, 2019; Kurt & Sanber, 2022). In addition to the contribution of the selected sample group to the literature, it will also contribute due to the limited study of the subject in Türkiye. In addition, to the knowledge of the researcher, when the studies based on the systematic transactional model in the international literature are examined, it is seen that only one study (Fallahchai et al., 2019) focuses on the stress spillover and crossover process with dual-career married couples, while it is the first study in Türkiye based on the reflection of stress spillover and crossover on marriage in dual-career married couples.

5.3.2. Practical Implications

The study has practical implications as well as theoretical implications. For developing countries, it has become essential for women to participate in working life and make the necessary contribution to the family economy (Aksoy et al., 2019). Therefore, the number of dual-career couples increases over time (Neault & Pickerell, 2005). With the increase in the place of women in business life, different concepts such as dual-occupation, dual-career, dual-income, working parents, and dual-career marriage have emerged (Bhowon, 2013). The concept of dual-career

couples is defined as a type of couple in which both spouses have an active career and family life (Rapoport & Rapoport, 1969). Women's participation in business life has provided strengthening effects on marriage dynamics, such as such as economic relief, equal sharing of responsibilities regarding housework or child care, increased social networks, and support for personal development (Gorissen, 2009; Hall & Hall, 1979; Soysal, 2009). However, in addition to their empowering effects, stressors and difficulties in business life can also lead to conflicts in marriage and, as a result, divorce (Duxbury, 2003; Edwards & Rothbard, 2000; Schulz et al., 2004). However, it has been proven that the coping strategies used by married individuals can change their relationships with their spouses, their marital satisfaction, and their ability to cope with the problems they experience in their marriages (Goh et al., 2011). Research has found that positive dyadic coping positively supports marital satisfaction (i.e., Hilpert et al., 2016; Landis et al., 2013; Wunderer & Schneewind, 2008) and marital quality (see Hoesni et al., 2015; Kloda et al., 2013). In conclusion, since the study found that positive dyadic coping has a protective role on the marital functions of dual-career married couples, couple counselors can be directed to develop intervention programs, group studies and seminars on dyadic coping for dual-career married couples and families.

5.4. Recommendations

Research on dyadic coping shows that the model is confirmed with many relationship types and different examples both in international and Turkish literature. However, the sample examined in the current study is new, especially in Türkiye. Since it is new, studies can be conducted on different sample groups. The sample of this study can be generalized to middle- and upper-society economic levels and heterosexual dual-career couples in Türkiye. Therefore, future studies could include low SES dual-career married couples, cohabiting heterosexual couples, and cohabiting same-sex couples.

In addition, the age limit of the sample in this study consists of individuals between the ages of 24-55, which is a very wide range. In future studies, it would be useful to use cross-sectional designs to test the hypotheses of the current study in different age

groups. Additionally, dyadic coping needs to be further investigated with different variables associated with marital dynamics. Moreover, it was seen that the number of dual-career married couples is increasing over time, all over the world and in Türkiye. It is strongly recommended that possible factors affecting the marital satisfaction of dual-career couples with this new lifestyle be examined in further research. The duration of marriage of dual-career married couples, their number of children, and their perspectives on having children are important factors that should be examined in further research. The current study, conducted with the proposed model, examined the relationship between psychological symptoms and marital satisfaction but did not examine the relationship of the job stress variable with marital satisfaction, despite being a dual-career sample. Therefore, there is a need for research to investigate the relationship between the stress experienced by dual-career married couples in their jobs and their marital satisfaction. Moreover, to better understand the role of dyadic coping in the context of dual-career couples, future research could examine other types of dyadic coping, not just positive. In addition, the participants' marriage duration varies between 6 months and 360 months, which is a very wide range. Therefore, it is important to evaluate how the relationship between couples' psychological symptoms, dyadic coping factors, and marital satisfaction differs according to different age groups. In conclusion, dyadic coping is promising in terms of explaining psychological symptoms and marital satisfaction.

REFERENCES

Ak, A. (2019), *Türkiye'de Kadınların İşgücüne Katılımında Engeller ve Çözüm Önerileri [Obstacles and Solution Suggestions in Women's Participation in the Workforce in Türkiye]* (Unpublished master's dissertation). Bursa Uludağ Üniversitesi, Sosyal Bilimler Enstitüsü, Bursa.

Akanbi, S. T., & Oyewo, N. A. (2014). Influence of work-family conflict and perceived social support on marital satisfaction of individuals with dual-career family in Oyo, Nigeria. *British Journal of Education, Society & Behavioural Science*, *4*(10), 1400-1411. https://doi.org/10.9734/BJESBS/2014/9114

Akoğlu, Ö. A., & Küçükkaragöz, H. (2018). Boşanma nedenleri ve boşanma sonrasında karşılaşılan güçlüklere ilişkin bir araştırma: İzmir ili örneği [A research on the reasons for divorce and the difficulties encountered after divorce: The example of Izmir province]. *Toplum ve Sosyal Hizmet*, *29*(1), 153-172.

Aksu, N. B., & Can, Y. (2016). Boşanma sürecinde ve sonrasında kadın. [Woman during the divorce process and after]. *Elektronik Sosyal Bilimler Dergisi*, *15*(58), 888-902. https://doi.org/10.17755/esosder.258824

Aksoy, N., Felek, Ş., Yayla, N., & Çeviş, İ. (2019). Türkiye'de Kadın İstihdamı ve Etkileyen Faktörler [Women's Employment in Türkiye and Affecting Factors]. *Yönetim ve Ekonomi Araştırmaları Dergisi*, *17*(3), 146-16. https://doi.org/10.11611/yead.594124

Al-Darmaki, F. R., Ahammed, S., Hassane, S. H., Seif Abdullah, A., Yaaqeib, S. I., & Dodeen, H. (2017). Antecedents and consequences of marital satisfaction in an Emirati sample: A structural equation model analysis. *Marriage & Family Review*, *53*(4), 365-387. https://doi.org/10.1080/01494929.2016.1184211

Aldous, J. (1996). *Family careers: Rethinking the developmental perspective*. Sage.

Allen, T. D., Bruck, C. S., Herst, D. E. L., & Sutton, M. (2000). Consequences associated with work-to-family conflict: A review and agenda for future research. *Journal of Occupational Health Psychology*, *5*, 278-308. https://doi.org/10.1037/1076-8998.5.2.278

Allen E. S., Markman H. J., Rhoades G. K., Scott S. B., & Stanley S. M. (2013). Reasons for divorce and recollections of premarital intervention: Implications for improving relationship education. *Couple and Family*

Psychology: Research and Practice, 2(2), 131–145. https://doi.org/10.1037/a0032025

Altuntaş, E. (2003). *Stres Yönetimi [Stress Management]*. Alfa Yayınları.

Amato, P., & Booth, A. (1991). Divorce and psychological stress. *Journal of Health and Social Behavior*, *32*(4), 396-407. https://doi.org/10.2307/2137106

American Psychiatric Association (1994). *Diagnostic and Statistical Manual of Mental Disorders*. DC: American Psychiatric Association.

Anafarta, N. (2011). The relationship between work-family conflict and job satisfaction: A structural equation modeling (SEM) approach. *International Journal of Business and Management*, *6*(4), 1833-8119. https://doi.org/10.5539/ijbm.v6n4p168

Arbuckle, J. L. (2016). *IBM SPSS Amos* (Version 24) [Computer software]. IBM Software Group.

Aslan, I., Ochnik, D., & Çınar, O. (2020). Exploring perceived stress among students in Türkiye during the COVID-19 pandemic. *International Journal of Environmental Research and Public Health*, *17*(23), 8961.

Aydoğan, D., & Ozbay, Y. (2018). Mediation role of dyadic coping on parenting stress and relational resilience in couples. *Marriage & Family Review*, *54*(2), 128-147. https://doi.org/10.1080/01494929.2017.1302900

Badr, H., Carmack, C. L., Kashy, D. A., Cristofanilli, M., & Revenson, T. A. (2010). Dyadic coping in metastatic breast cancer. *Health Psychology*, *29*(2), 169. https://doi.org/10.1037/a0018165

Bakker, A. B. (2009). The crossover of burnout and its relation to partner health. *Stress and Health: Journal of the International Society for the Investigation of Stress*, *25*(4), 343-353. https://doi.org/10.1002/smi.1278

Barlow, D. H. (2000). Unraveling the mysteries of anxiety and its disorders from the perspective of emotion theory. *American Psychologist*, *55*, 1247-1263. https://doi.org/10.1037//0003-066x.55.11.1247

Bartley, S. J., Judge, W., & Judge, S. (2007). Antecedents of Marital Happiness and Career Satisfaction: An Empirical Study of Dual-Career Managers. *Journal of Business and Public Affairs, 1*(1).

Bashir, T. F., Hassan, S., Maqsood, A., Khan, Z. A., Issrani, R., Ahmed, N., & Bashir, E. F. (2020). The psychological impact analysis of novel COVID-19

pandemic in health sciences students: A global survey. *European Journal of Dentistry*, *14*(1), 91-96.

Baumeister, M. (2007). Marital satisfaction. *Encyc-45348.qxd*, 541-544.

Baykal, E. (2020). COVID-19 bağlamında psikolojik dayanıklılık, kaygı ve yaşam doyum ilişkisi [The relationship between psychological resilience, anxiety and life satisfaction in the context of COVID-19]. *International Journal of Social and Economic Sciences*, *10*(2), 68-80. https://doi.org/10.35365/ctjpp.22.2.08

Bebbington, A. C. (1973). The function of stress in the establishment of the dual-career family. *Journal of Marriage and the Family*, 530-537. https://doi.org/10.2307/350589

Beck, A. T. (1979). *Cognitive therapy and the emotional disorders*. Penguin.

Benazon, N. R., & Coyne, J. C. (2000). Living with a depressed spouse. *Journal of Family Psychology*, *14*, 71–79.

Berg, C. A., & Upchurch, R. (2007). A developmental-contextual model of couples coping with chronic illness across the adult life span. *Psychological Bulletin*, *133*(6), 920. https://doi.org/10.1037/0033-2909.133.6.920

Bernard, H. R. (2002). *Research methods in anthropology: Qualitative and quantitative approaches* (3rd ed.). Altamira Press.

Berscheid, E. (2013). *The Changing Reasons for Marriage and Divorce*. Psychology Press.

Bhowon, U. (2013). Role salience, work-family conflict and satisfaction of dual-earner couples. *Journal of Business Studies Quarterly*, *5*(2), 78.

Biernacki, P., & Waldorf, D. (1981). Snowball sampling: Problems and techniques of chain referral sampling. *Sociological Methods and Research*, *10*(2), 141-163. https://doi.org/10.1177/004912418101000205

Blumstein, P., & Schwartz, P. (1983). *American Couples: Money, Work, Sex* (1st ed.). Pocket Books.

Bodenmann, G. (1995). A systemic-transactional conceptualization of stress and coping in couples. *Swiss Journal of Psychology*, *54*(1), 34–49.

Bodenmann, G. (1997). Dyadic coping-a systematic-transactional view of stress and coping among couples: Theory and empirical findings. *European Review of Applied Psychology*, *47*, 137-140.

Bodenmann, G., Charvoz, L., Bradbury, T. N., Bertoni, A., Iafrate, R., Giuliani, C., Banse, R., & Behling, J. (2007). The role of stress in divorce: A three-nation retrospective study. *Journal of Social and Personal Relationships, 24*(5), 707–728. https://doi.org/10.1177/0265407507081456

Bodenmann, G. (2000). *Stress und Coping bei Paaren* (1st ed.). Hogrefe.

Bodenmann, G. (2005). Dyadic Coping and Its Significance for Marital Functioning. In T. A. Revenson, K. Kayser, & G. Bodenmann (Eds.), *Couples coping with stress: Emerging perspectives on dyadic coping* (pp. 33–49). American Psychological Association.

Bodenmann, G., & Cina, A. (2006). Stress and coping among stable-satisfied, stable-distressed and separated/divorced Swiss couples: A 5-year prospective longitudinal study. *Journal of Divorce & Remarriage*, *44*(2), 71-89. https://doi.org/10.1300/J087v44n01_04

Bodenmann, G., & Perrez, M. (1991). Dyadisches Coping-eine Systemische Betrachtungsweise der Belastungsbewältigung in Partnerschaften. *Zeitschrift für Familienforschung*, *3*(3), 4-25.

Bodenmann, G., Pihet, S., & Kayser, K. (2006). The relationship between dyadic coping and marital quality: A 2-year longitudinal study. *Journal of Family Psychology*, *20*(3), 485. https://doi.org/10.1037/0893-3200.20.3.485

Bodenmann, G., & Randall, A. K. (2013). Close relationships in psychiatric disorders. *Current Opinion in Psychiatry*, *26*(5), 464-467. https://doi.org/10.1097/YCO.0b013e3283642de7

Bodenmann, G., Charvoz, L., Bradbury, T. N., Bertoni, A., Iafrate, R., Giuliani, C., Banse, R., & Behling, J. (2007). The role of stress in divorce: A three-nation retrospective study. *Journal of Social and Personal Relationships*, *24*(5), 707-728. https://doi.org/10.1177/0265407507081456

Bolger, N., DeLongis, A., Kessler, R. C., & Wethington, E. (1989). The contagion of stress across multiple roles. *Journal of Marriage and the Family*, 175-183. https://doi.org/10.2307/352378

Bookwala, J., & Jacobs, J. (2004). Age, marital processes, and depressed affect. *Gerontologist*, *44*(3), 328-338. https://doi.org/10.1093/geront/44.3.328

Bradbury, T. N., & Fincham, F. D. (1990). Attributions in marriage: Review and critique. *Psychological Bulletin*, *107*(1), 3. https://doi.org/10.1037/0033-2909.107.1.3

Bradbury, T. N., Fincham, F. D., & Beach, S. R. H. (2000). Research on the nature and determinants of marital satisfaction: A decade in review. *Journal of Marriage and the Family*, *62*(4), 964-980. https://doi.org/10.1111/j.1741-3737.2000.00964.x

Browne, M., W. & Cudeck, R. (1993). Alternative ways of assessing model fit. In K. A. Bollen & J. S. Long (Eds.), *Testing structural equation models* (pp. 136-162). Sage.

Budak, S. (2021). *Psikoloji Sözlüğü [Dictionary of Psychology]*. Bilim ve Sanat Yayınları.

Burns, D. (2019). *İyi hissetmek [To feel good]*. Psikonet Yayınları.

Canbulat, N., & Çankaya, Z. C. (2014). Evli bireylerin öznel iyi olma düzeylerinin yordanması [Predicting the subjective well-being levels of married individuals]. *Ege Eğitim Dergisi*, *15*(2), 556-576. https://doi.org/10.12984/eed.67597

Canel, A. N. (2007). *Ailede problem çözme, evlilik doyumu ve örnek bir grup çalışmasının sınanması* [*Predicting the subjective well-being levels of married individuals*] (Publication No. 210292) [Doctoral dissertation, Marmara University]. Ulusal Tez Merkezi.

Cappe, E., Bolduc, M., Vilcoque, A., Jammet, L., Rostaing-Rigattieri, S., Perrot, S., & Untas, A. (2021). Perceived dyadic coping, anxiety, depression and satisfaction with life of women diagnosed with fibromyalgia. *Psychologie Française*, *66*(3), 259-271. https://doi.org/10.1016/j.psfr.2020.09.002

Cohen, T. F., Strong, B., & DeVault, C. (2008). *The marriage and family experience: Intimate relationships in a changing society*. Thomson/Wadsworth.

Chae, D. H., & Lincoln, K. D. (2010). Stress, marital satisfaction, and psychological distress among African Americans. *Journal of Family Issues*, *31*(8), 1081-1105. https://doi.org/10.1177/0192513X10365826

Clark, L. A., & Watson, D. (1991). Tripartite model of anxiety and depression: Psychometric evidence and taxonomic implications. *Journal of Abnormal Psychology*, *100*, 316-336. https://doi.org/10.1037/0021-843X.100.3.316

Cooper, A. N., May, R. W., & Fincham, F. D. (2019). Stress spillover and crossover in couple relationships: Integrating religious beliefs and prayer. *Journal of Family Theory & Review*, *11*(2), 289-314. https://doi.org/10.1111/jftr.12330

Coyne, J. C., Kessler, R. C., Tal, M., Turnbull, J., Wortman, C. B., & Greden, J. F. (1987). Living with a depressed person. *Journal of Consulting and Clinical Psychology, 55*, 347–352.

Coyne, J. C., & Smith, D. A. (1991). Couples coping with a myocardial infarction: A contextual perspective on wives' distress. *Journal of Personality and Social Psychology, 61*(3), 404-412. https://doi.org/10.1037//0022-3514.61.3.404

Coyne, J. C., Thompson, R., & Palmer, S. C. (2002). Marital quality, coping with conflict, marital complaints, and affection in couples with a depressed wife. *Journal of Family Psychology, 16*, 26–37.

Cronkite, R. C., & Moos, R. H. (1984). The role of predisposing and moderating factors in the stress-illness relationship. *Journal of Health and Social Behavior*, 372-393. https://doi.org/10.2307/2136377

Czeisler, M. É., Lane, R. I., Petrosky, E., Wiley, J. F., Christensen, A., Njai, R., & Rajaratnam, S. M. (2020). Mental health, substance use, and suicidal ideation during the COVID-19 pandemic—United States. *Morbidity and Mortality Weekly Report, 69*(32), 1049-1057.

Çağ, P. (2011). *Evli Bireylerde Eş Desteği ve Evlilik Doyumu [Spousal Support and Marital Satisfaction in Married Individuals]* (Publication No. 308412) [Master's thesis, Hacettepe Üniversitesi]. Ulusal Tez Merkezi.

Çağ, P., & Yıldırım, İ. (2013). Evlilik Doyumunu Yordayan İlişkisel ve Kişisel Değişkenler [Relational and Personal Variables Predicting Marital Satisfaction]. *Turkish Psychological Counseling & Guidance Journal*, *4*(39).

Çelik, M., & İnanç, B. Y. (2009). Evlilik Doyum Ölçeği: Geçerlik ve Güvenirlik Çalışmaları [Marital Satisfaction Scale: Validity and Reliability Studies]. *Çukurova Üniversitesi Sosyal Bilimler Enstitüsü Dergisi*, *18*(2), 247-269.

Davila, J., Karney, B. R., Hall, T. W., & Bradbury, T. N. (2003). Depressive symptoms and marital satisfaction: Within-subject associations and the moderating effects of gender and neuroticism. *Journal of Family Psychology, 17*, 557–570.

Dehle, C., & Weiss, R. L. (2002). Associations between anxiety and marital adjustment. *The Journal of Psychology, 136*(3), 328-338.

Dymecka, J., Gerymski, R., & Machnik-Czerwik, A. (2022). How does stress affect life satisfaction during the COVID-19 pandemic? Moderated mediation analysis of sense of coherence and fear of

coronavirus. *Psychology, Health & Medicine*, *27*(1), 280-288. https://doi.org/10.1080/13548506.2021.1906436

Dimitrovsky, L., Shiff, R., & Zanany, I. (2002). Dimensions of depression and perfectionism in pregnant and nonpregnant women: Their levels and interrelationships and their relationship to marital satisfaction. *The Journal of Psychology: Interdisciplinary and Applied*, *136*(6), 631- 646.

Dilmaç, B., & Sakarya, E. (2020). Evli bireylerin evlilik uyum, yaşam memnuniyeti ve yaşam bağlılıkları arasındaki yordayıcı ilişkilerin incelenmesi [Examination of predictive relationships between marital adjustment, life satisfaction and life commitment of married individuals]. *Necmettin Erbakan Üniversitesi Ereğli Eğitim Fakültesi Dergisi*, *2*(1), 1-11. https://doi.org/10.21449/neusbf

Ditzen, B., Neumann, I. D., Bodenmann, G., Von Dawans, B., Turner, R. A., Ehlert, U., & Heinrichs, M. (2007). Effects of different kinds of couple interaction on cortisol and heart rate responses to stress in women. *Psychoneuroendocrinology*, *32*, 565–574. https://doi.org/10.1016/j.psyneuen.2007.03.011

Donato, S., Parise, M., Pagani, A. F., Lanz, M., Regalia, C., Rosnati, R., & Iafrate, R. (2021). Together against COVID-19 concerns: The role of the dyadic coping process for partners' psychological well-being during the pandemic. *Frontiers in Psychology*, *11*, 578395. https://doi.org/10.3389/fpsyg.2020.578395

Dowd, D. A., Means, M. J., Pope, J. F., & Humphries, J. H. (2005). Attributions and marital satisfaction: The mediated effects of self-disclosure. *Journal of Family and Consumer Sciences*, *97*(1), 22-26.

Duxbury, L. (2003). Work-life conflict in Canada in the new millennium: A status report. *Sydney Papers*, *15*(1), 78-97.

Edwards, J., & Rothbard, N. 2000, Mechanisms Linking Work and Family: Clarifying the Relationship between Work and Family Constructs. *Academy of Management Review*, *25*(1), 178-199. https://doi.org/10.2307/259269

Efeoğlu, I. E., & Ozcan, S. (2013). Work-Family Conflict and Its Association with Job Performance and Family Satisfaction among Physicians. Australian *Journal of Basic and Applied Sciences*, *7*(7), 43-48.

Eryurt, M. A., Koç, İ., & Yüksel-Kaptanoğlu, İ. (2012). Kadınların evlilik döngüsü: Evliliğin sonlanması ve yeniden evlenme [Marriage cycle of women: Dissolution of marriage and remarriage]. *Kadın/Woman*, *13*(1), 63-96.

Eşel, E. (2003), "Genelleşmiş Anksiyete Bozukluğunun Nörobiyolojisi" ["Neurobiology of Generalized Anxiety Disorder"]. *Klinik Psikofarmakoloji Bülteni, 13*(2), 78-87.

Evren, C., & Ögel, K. (2003). Alkol/madde bağımlılarında dissosiyatif belirtiler ve çocukluk çağı travması, depresyon, anksiyete ve alkol/madde kullanımı ile ilişkisi [Dissociative symptoms in alcohol/drug addicts and their relationship with childhood trauma, depression, anxiety and alcohol/substance use]. *Anadolu Psikiyatri Dergisi*, *4*(1), 30-37.

Eysenck, H. J. (1980). Personality, marital satisfaction, and divorce. *Psychological Reports*, *47*, 1235-1238.

Falconier, M. K., Jackson, J. B., Hilpert, P., & Bodenmann, G. (2015). Dyadic coping and relationship satisfaction: A meta-analysis. *Clinical Psychology Review*, *42*, 28-46. https://doi.org/10.1016/j.cpr.2015.07.002

Falconier, M. K., & Kuhn, R. (2019). Dyadic coping in couples: A conceptual integration and a review of the empirical literature. *Frontiers in Psychology*, *10*, 571. https://doi.org/10.3389/fpsyg.2019.00571

Fallahchai, R., Fallahi, M., & Randall, A. K. (2019). A dyadic approach to understanding associations between job stress, marital quality, and dyadic coping for dual-career couples in Iran. *Frontiers in Psychology*, *10*, 487. https://doi.org/10.3389/fpsyg.2019.00487

Falconier, M. K., Nussbeck, F., & Bodenmann, G. (2013). Immigration stress and relationship satisfaction in Latino couples: The role of dyadic coping. *Journal of Social and Clinical Psychology*, *32*(8), 813-843. https://doi.org/10.1521/jscp.2013.32.8.813

Falconier, M. K., Randall, A. K., & Bodenmann, G. (2016*). Couples coping with stress: A cross-cultural perspective*. Routledge.

Fan, C. S., & Lui, H. K. (2004). Extramarital affairs, marital satisfaction, and divorce: Evidence from Hong Kong. *Contemporary Economic Policy*, *22*(4), 442-452. https://doi.org/10.1093/cep/byh033

Fellizer, K. (2017). *How your sex life can benefit your work life*. Insider.

Ferah, N. (2019). Boşanma sürecindeki bireylerde depresyon anksiyete stres ve dini başa çıkma arasındaki ilişki [The relationship between depression anxiety stress and religious coping in individuals going through divorce]. *Bilimname, 2019*(37), 383-405. https://doi.org/10.28949/bilimname.470155

Fidell, L. S., & Tabachnick, B. G. (2012). *Principal components and factor analysis: Using multivariate statistics*. Pearson.

Fincham, F. D., & Bradbury, T. N. (1992). Assessing Attributions in Marriage: The Relationship Attribution Measure. *Journal of Personality and Social Psychology*, *62*(3), 457. https://doi.org/10.1037/0022-3514.62.3.457

Fincham, F. D., & Bradbury, T. N. (1987). The impact of attributions in marriage: A longitudinal analysis. *Journal of Personality and Social Psychology*, *53*(3), 510. https://doi.org/10.1037/0022-3514.53.3.510

Fraenkel, J., Hyun, H. H., & Wallen, N. E. (2011). *How to design and evaluate research in education* (8th ed.). McGraw-Hill.

Ganster, D. C., & Thomas, L. T. (1995). Impact of family-supportive work variables on work-family conflict and strain: A control perspective. *Journal of Applied Psychology*, *80*(1), 6-15. https://doi.org/10.1037/0021-9010.80.1.6

Genç, E., Su, Y., & Turhan, Z. (2021). The mediating role of dyadic coping on the effects of COVID-19 and relationship satisfaction among Turkish couples. *The American Journal of Family Therapy*, *51*(4), 421-439. https://doi.org/10.1080/01926187.2021.1984338

Gençtürk, Z. (2022). Türkiye'de Kadının İşgücüne Katılımını Etkileyen Faktörler [Factors Affecting Women's Participation in the Labor Force in Türkiye]. *Süleyman Demirel Üniversitesi Sosyal Bilimler Enstitüsü Dergisi*, (43), 361-394.

Glenn, N. D. (1991). The Recent Trend in Marital Success in the United States. *Journal of Marriage and Family*, *53*, 261-270.

Green, D. H., & Zenisek, T. J. (1983). Dual Career Couples: Individual and Organizational Implications. *Journal of Business Ethics*, *2*, 171-184.

Goh, Y., Sawang, S., & Watson, S. B. (2011), Gender influences on the work-related stress coping process. *Journal of Individual Differences*, *32*(1), 39-46. https://doi.org/10.1027/1614-0001/a000033

Göçer, S. (2021). *Çift kariyerli eşler olgusunun akademisyenler üzerindeki etkisine ait çalışma [Study on the impact of the dual career spouse phenomenon on academicians]* (Publication No. 673256) [Master's thesis, Ufuk Üniversitesi]. Ulusal Tez Merkezi.

Gökmen, A. (2001). *Evli eşlerin birbirine yönelik kontrolcülük ve bağımlılık algılarının evlilik doyumu üzerindeki etkisi [The effect of married spouses' perceptions of controllingness and dependency towards each other on*

marital satisfaction] (Publication No. 100336) [Master's thesis, Hacettepe University]. Ulusal Tez Merkezi.

Gülerce, A. (1996). *Türkiye'de ailelerin psikolojik örüntüleri [Psychological patterns of families in Türkiye]*. Boğaziçi Üniversitesi Yayınları.

Hackley, H., & Cormier, S. (2005). *The professional counsellor: A process guide to helping*. Pearson Education.

Hair, J.F., Black, W.C., Babin, B.J., & Anderson, R.E. (2010). *Multivariate data analysis* (7th ed.). Pearson

Hall, F.S., & Hall, D.T. (1979). *The two-career couple.* Addison-Wesley Publishing Company.

Hayes, S., Hirsch, C., & Mathews, A. (2008). Restriction of working memory capacity during worry. *Journal of Abnormal Psychology*, *117*(3), 712–717. https://doi.org/10.1037/a0012908

Hayward, M., & Zhang, Z. (2006). Gender, the marital life course, and cardiovascular disease in late midlife. *Journal of Marriage and Family*, *68*(3), 639-657. https://doi.org/10.1111/j.1741-3737.2006.00280.x

Heider, F. (1958). *The psychology of interpersonal relations*. Wiley.

Heinrichs, M., Baumgartner, T., Kirschbaum, C., & Ehlert, U. (2003). Social support and oxytocin interact to suppress cortisol and subjective responses to psychosocial stress. *Biological Psychiatry*, *54*, 1389–1398. https://doi.org/10.1016/S0006- 3223(03)00465-7

Hendrick, S. S., & Hendrick, C. (1997). Love and satisfaction. In Strenberg & Hojjat (Eds.) *Satisfaction in Close Relationships* (pp. 56-78). Guildford Press.

Henry, J., & Parthasarathy, R. (2010). The family and work connect: A case for relationship focused family life education. *Indian Journal of Occupational and Environmental Medicine*, *14*(1). https://doi.org/10.4103/0019-5278.64609

Higgins, K. K. (2005). *The stress management self-efficacy inventory (SMSEI): Development and initial psychometrics*. University of Arkansas.

Hilpert, P., Randall, A. K., Sorokowski, P., Atkins, D. C., Sorokowska, A., Ahmadi, K., ... & Yoo, G. (2016). The associations of dyadic coping and relationship satisfaction vary between and within nations: A 35-nation study. *Frontiers in Psychology*, 1106.

Hinnen, C., Ranchor, A. V., Sanderman, R., Snijders, T. A., Hagedoorn, M., & Coyne, J. C. (2008). Course of distress in breast cancer patients, their partners, and matched control couples. *Annals of Behavioral Medicine*, *36*(2), 141-148. https://doi.org/10.1007/s12160-008-9061-8

Hobfoll, S. E. (1989). Conservation of resources: A new attempt at conceptualizing stress. *American Psychologist*, *44*(3), 513-524.

Hoesni, S. M., İsmail, R., Razak, S. N. F. A., & Zakaria, E. (2015). The role of dyadic coping to marital quality–the conceptual paper. *Procedia-Social and Behavioral Sciences*, *211*, 911-916. https://doi.org/10.1016/j.sbspro.2015.11.120

Hu, L., & Bentler, P. (1999). Cutoff criteria for fit indices in covariance structure analysis: Conventional criteria versus new alternatives. *Structural Equation Modeling*, *6*, 1-55.

Jamadin, N., Mohamad, S., Syarkawi, Z., & Noordin, F. (2015). Work-family conflict and stress: Evidence from Malaysia. *Journal of Economics, Business and Management*, *3*(2), 309-312. https://doi.org/10.7763/JOEBM.2015.V3.200

Johnson, M. D., Horne, R. M., & Galovan, A. M. (2016). The developmental course of supportive dyadic coping in couples. *Developmental Psychology*, *52*(12), 2031. https://doi.org/10.1037/dev0000216

Jöreskog, K. G., & Sörbom, D. (1993). *LISREL 8: Structural equation modeling with the SIMPLIS command language*. Scientific Software International.

Judge, T. A., & Ilies, R. (2004). Affect and Job Satisfaction: A Study of Their Relationship at Work and at Home. *Journal of Applied Psychology*, *89*(4), 661–673. https://doi.org/10.1037/0021-9010.89.4.661

Karaaslan, K. Ç., Çalmaşur, G., & Aysin, M. E. (2021). Bireylerin yaşam memnuniyetlerini etkileyen faktörlerin incelenmesi [Examination of factors affecting individuals' life satisfaction]. *Atatürk Üniversitesi İktisadi ve İdari Bilimler Dergisi*, *35*(1), 263-290.

Karabıyık, İ. (2012). İşgücü Piyasasının Yapısal Özellikleri ve Türkiye‟de Kadınların İşgücüne Katılma Sorun [Structural Features of the Labor Market and the Problem of Women's Participation in the Labor Force in Türkiye]. *International Journal of Human Sciences*, *2*(9), 1282-1310.

Karataş, Z. (2020). COVID-19 Pandemisi Sürecinin LGS ve YKS Sınavına Hazırlık Sürecinde Olan Çocuk ve Ergenlerin Psikolojilerine Yansımalarının İncelenmesi [Examining the Reflections of the COVID-19 Pandemic

Process on the Psychology of Children and Adolescents Who Are Preparing for the LGS and YKS Exams]. *Pandemi Döneminde Çocuk ve Ergen Psikolojisi*, *1*, 54-74.

Kasalova, P., Prasko, J., Holubová, M., Vrbova, K., Zmeskalova, D., Slepecky, M., & Grambal, A. (2018). Anxiety disorders and marital satisfaction. *Neuroendocrinol Lett*, *38*(8), 555-64.

Kashy, D. A., & Kenny, D. A. (2000). The analysis of data from dyads and groups. In H. T. Reis & C. M. Judd (Eds.), Handbook of research methods in social psychology (pp. 451–477). Cambridge University Press.

Kazmi, S. S. A., Hashim, M., Manzoor, S. R., & Kee, D. M. H. (2017). Effect of job stress on marital satisfaction: Mediating role of work family conflict. *City University Research Journal*, *7*(1), 30-41.

Kenny, D. A. (1996). Models of non-independence in dyadic research. *Journal of Social and Personal Relationships*, *13*, 279–294. https://doi.org/10.1177/0265407596132007

Kenny, D. A., Kashy, D. A., & Cook, W. L. (2006). *Dyadic data analysis*. Guilford Press.

Kim, E., Lee, J., & Wachholtz, A. (2016). The effect of perceived stress on life satisfaction: The mediating effect of self-efficacy. *Ch'ongsonyonhak Yongu*, *23*(10), 29. https://doi.org/10.21509/KJYS.2016.10.23.10.29

Kline, R. B. (2011). *Principles and practice of structural equation modeling* (3rd ed.). Guilford Press.

Kirkpatrick, L. A., & Davis, K. E. (1994). Attachment style, gender, and relationship stability: A longitudinal analysis. *Journal of Personality and Social Psychology*, *66*, 502–512. https://doi.org/10.1037//0022-3514.66.3.502

Kloda, I., Matthews, G., & Zeidner, M. (2013). Does dyadic coping mediate the relationship between emotional intelligence (EI) and marital quality? *Journal of Family Psychology*, *27*(5), 795–805. https://doi.org/10.1037/a0034009

Kossek, E., & Ozeki, C. (1998). Work-family conflict, policies, and the job-life satisfaction relationship: A review and direction for organization behavior-human resources research. *Journal of Applied Psychology*, *83*(2), 139-150.

Köroğlu, E. (2006). *Depresyon nedir, nasıl baş edilir?* [What is depression and how to cope with it?] (2nd ed.). Hekimler Yayın Birliği.

Kramer, B. J. (1993). Expanding the conceptualization of caregiver coping: The importance of relationship-focused coping strategies. *Family Relations, 42*, 383-391. https://doi.org/10.1177/0164027513513271

Kraemer, L. M., Stanton, A. L., Meyerowitz, B. E., Rowland, J. H., & Ganz, P. A. (2011). A longitudinal examination of couples' coping strategies as predictors of adjustment to breast cancer. *J. Family Psychol*. *25*, 963–972. https://doi.org/10.1037/a0025551

Krishnan, A., Alias, S. N., & Omar, Z. B. (2020). Factors influencing work–family conflict among dual–career couples: A research framework. *Int. J. Acad. Res. Bus. Soc. Sci, 10*, 446-460.

Kundu, S. C., Phogat, R. S., Datta, S. K., & Gahlawat, N. (2016). Impact of Workplace Characteristics on Work-Family Conflict of Dual-Career Couples. *International Journal of Organizational Analysis*, *24*(5), 883-907.

Kurt, İ. E., & Akbaş, T. (2019). Stresle Çift Olarak Baş Etme Envanteri'nin Türkçe'ye Uyarlanması [Adaptation of the Dyadic Coping Inventory into Turkish]. *OPUS International Journal of Society Researches*, *13*(19), 636-655.

Kurt, İ. E., & Sanberk, İ. (2022). COVID-19 Stress in Married Individuals in Terms of Dyadic Coping and Problem-Solving in Marriage. *Turkish Psychological Counseling and Guidance Journal, 12*(67), 687-704.

Landis, M., Peter-Wight, M., Martin, M., & Bodenmann, G. (2013). Dyadic coping and marital satisfaction of older spouses in long-term marriage. *GeroPsych: The Journal of Gerontopsychology and Geriatric Psychiatry*, *26*(1), 39–47. https://doi.org/10.1024/1662-9647/a000077

Larson, J. H., & Holman, T. B. (1994). *Predictors of marital quality and stability. Family Relations*, *43*, 228–237. https://doi.org/10.2307/585327

Lavee, Y. (2013). Stress processes in families and couples. Springer, Boston, MA.

Lazarus, R. S., & Folkman, S. (1984). *Stress, appraisal, and coping*. Springer Publishing Company.

Lazarus, R. S., & Folkman, S. (1986). Cognitive theories of stress and the issue of circularity. In M. H. Appley & R. Trumbull (Eds), *Dynamics of Stress. Physiological, Psychological, and Social Perspectives* (pp. 63–80). Plenum.

Ledermann, T., & Bodenmann, G. (2006). Moderator- und Mediatoreffekte bei dyadischen Daten: Zwei Erweiterungen des Akteur-Partner-Interdependenz-Modells [Moderator and Mediator Effects in Dyadic Research: Two

Extensions of the Actor-Partner Interdependence Model]. *Zeitschrift Für Sozialpsychologie, 37*(1), 27–40. https://doi.org/10.1024/0044-3514.37.1.27

Ledermann, T., Bodenmann, G., Rudaz, M., & Bradbury, T. N. (2010). Stress, communication, and marital quality in couples. *Family Relations*, *59*(2), 195-206. https://doi.org/10.1111/j.1741-3729.2010.00595.x

Levesque, C., Lafontaine, M. F., Caron, A., Flesch, J. L., & Bjornson, S. (2014). Dyadic empathy, dyadic coping, and relationship satisfaction: A dyadic model. *Europe's Journal of Psychology*, *10*(1), 118-134. https://doi.org/10.5964/ejop.v10i1.697

Levine, S., & Ursin, H., 1991. What is stress? In: Brown, M.R., Rivier, C., & Koob, G. (Eds.), *Stress. Neurobiology and Neuroendocrinology* (pp. 3–21). Marcel Decker.

Li, T., & Fung, H. H. (2011). The Dynamic Goal Theory of Marital Satisfaction. *Review of General Psychology*, *15*(3), 246-254. https://doi.org/10.1037/a0024694

Lovibond, P. F., & Lovibond, S. H. (1995). The structure of negative emotional states: Comparison of the Depression Anxiety Stress Scales (DASS) with the Beck Depression and Anxiety Inventories. *Behaviour Research and Therapy*, *33*(3), 335-343. https://doi.org/10.1016/0005-7967(94)00075-u

Lupo, M. K., & Strous, R. D. (2011). Religiosity, anxiety and depression among Israeli medical students. *Isr Med Assoc J*, *13*(10), 613-8.

Lyons, K. S., Miller, L. M., & McCarthy, M. J. (2016). The roles of dyadic appraisal and coping in couples with lung cancer. *J. Family Nurs*. *22*, 493–514. https://doi.org/10.1177/1074840716675976

Lyubomirsky, S., Kasri, F., & Zehm, K. (2003). Dysphoric rumination impairs concentration on academic tasks. *Cognitive Therapy and Research*, *27*, 309-330. https://doi.org/10.1023/A:1023918517378

Maroufizadeh, S., Hosseini, M., Foroushani, A. R., Omani-Samani, R., & Amini, P. (2019). The relationship between perceived stress and marital satisfaction in couples with infertility: Actor-partner interdependence model. *International Journal of Fertility & Sterility*, *13*(1), 66. https://doi.org/10.22074/ijfs.2019.5437

Mauno, S., & Kinnunen, U. (1999). The effects of job stressors on marital satisfaction in Finnish dual-earner couples. *Journal of Organizational Behavior*, *20*(6), 879-895.

Metis, S., & Cupach, W. R. (1990). The influence of relationship beliefs and problem-solving responses on satisfaction in romantic relationships. *Human Communication Research, 17*(1), 170-185.

Michelson, W. (1976). *Man and his urban environment*. Addison Wesley.

Monroe, M. S., & Slavich, G. (2007). Psychological stressors, overview. *Encyclopedia of Stress, 3*, 278-284. https://doi.org/10.1016/B978-012373947-6/00317-2

Murphy, T. F. (2011). Same-Sex Marriage: Not A Threat to Marriage or Children. *Journal of Social Philosophy*, *42*(3), 288–304. https://doi.org/10.1111/j.1467-9833.2011.01534.x

Nasir, R., & Md. Amin, S. (2010). Job Satisfaction, Job Performance and Marital Satisfaction among Dual-Worker Malay Couples. *International Journal of Interdisciplinary Social Sciences*, *5*(3). https://doi.org/10.18848/1833-1882/CGP/v05i03/51637

Neault, R. A., & Pickerell, D. A. (2005). Dual-Career Couples: The Juggling Act. *Canadian Journal of Counselling / Revue Canadienne de Counseling*, *39*(3), 187-198.

Neff, L. A., & Karney, B. R. (2007). Stress crossover in newlywed marriage: A longitudinal and dyadic perspective. *Journal of Marriage and Family, 69*(3), 594-607. https://doi.org/10.1111/j.1741-3737.2007.00394.x

Neff, L. A., & Karney, B. R. (2017). Acknowledging the elephant in the room: How stressful environmental contexts shape relationship dynamics. *Current Opinion in Psychology*, *13*, 107-110. https://doi.org/10.1016/j.copsyc.2016.05.013

Newbury-Birch, D., & Kamali, F. (2001). Psychological stress, anxiety, depression, job satisfaction, and personality characteristics in preregistration house officers. *Postgraduate Medical Journal*, *77*(904), 109-111. https://doi.org/10.1136/pmj.77.904.109

Newby, J. M., O'Moore, K., Tang, S., Christensen, H., & Faasse, K. (2020). Acute mental health responses during the COVID-19 pandemic in Australia. *PloS One, 15*(7), e0236562. https://doi.org/10.1371/journal.pone.0236562

O'Laughlin, E. M., & Bischoff, L. G. (2005). Balancing Parenthood and Academia: Work/Family Stress as Influenced by Gender and Tenure Status. *Journal of Family Issues, 26*, 79-106. https://doi.org/10.1177/0192513X04265942

Parker, M., Peltier, S., & Wolleat, P. (1981). Understanding dual career couples. *The Personnel and Guidance Journal*, *60*(1), 14-18.

Pakenham, K. I. (1998). Couple coping and adjustment to multiple sclerosis in care receiver-carer dyads. *Family Relations*, 269-277.

Pruchno, R., Genderson, M., & Cartwright, F. P. (2009). Depressive symptoms and marital satisfaction in the context of chronic disease: A longitudinal dyadic analysis. *Journal of Family Psychology*, *23*(4), 573-584.

Randall, A. K., & Bodenmann, G. (2009). The role of stress on close relationships and marital satisfaction. *Clinical Psychology Review*, *29*(2), 105-115. https://doi.org/10.1016/j.cpr.2008.10.004

Randall, A. K., & Bodenmann, G. (2017). Stress and its associations with relationship satisfaction. *Current Opinion in Psychology*, *13*, 96-106. https://doi.org/10.1016/j.copsyc.2016.05.010

Rapoport, R., & Rapoport, R. N. (1969). The Dual Career Family: A Variant Pattern and Social Change. *Human Relations*, *22*(1), 3–30. https://doi.org/10.1177/001872676902200l0

Rapoport, R., & Rapoport, R. (1971). *Dual Career Families*. Penguin Books.

Renshaw, K. D., Rodrigues, C. S., & Jones, D. H. (2008). Psychological symptoms and marital satisfaction in spouses of Operation Iraqi Freedom veterans: Relationships with spouses' perceptions of veterans' experiences and symptoms. *Journal of Family Psychology*, *22*(4), 586.

Ray, J. (1990). Interactional patterns and marital satisfaction among dual-career couples. *Journal of Independent Social Work*, *4*(3), 61-73.

Revenson, T. A. (1994). Social support and marital coping with chronic illness. *Annals of Behavioral Medicine*, *16*(2), 122-130. https://doi.org/10.1093/abm/16.2.122

Revenson, T. A., & Lepore, S. J. (2012). Coping in social context. *Handbook of Health Psychology*, 193-217.

Ruggles, S. (1997). The rise of divorce and separation in the United States, 1880–1990. *Demography*, *34*(4), 455-466. https://doi.org/10.2307/3038300

Rusu, P. P., Hilpert, P., Beach, S. R. H., Turliuc, M. N., & Bodenmann, G. (2015). Dyadic coping mediates the association of sanctification with marital satisfaction and well-being. *Journal of Family Psychology*, *29*(6), 843–849. https://doi.org/10.1037/fam0000108

O'Brien, T. B., & DeLongis, A. (1996). The interactional context of problem-, emotion-, and relationship-focused coping: The role of the big five personality factors. *Journal of Personality*, *64*(4), 775-813. https://doi.org/10.1111/j.1467-6494.1996.tb00944.x

O'Brien, T. B., DeLongis, A., Pomaki, G., Puterman, E., & Zwicker, A. (2009). Couples coping with stress: The role of empathic responding. *European Psychologist, 14*(1), 18-28. https://doi.org/10.1027/1016-9040.14.1.18

Örgev C, Biçer İ, Demir H, Aydın O, Şen E, Özyaral O (2020) The psychological impact of the COVID-19 pandemic on university students in Türkiye: A foundation university case. *Journal of International Health Sciences and Management*, 25-33.

Özgüven, İ. (2000). *Evlilik ve Aile Terapisi [Marriage and Family Therapy]*. *Pdrem Yayınları*.

Özgülük Üçok, S. B., & Hatipoğlu-Sümer, Z. (2023). Dual-career marriages: The interplay among dual-career lifestyle, satisfaction, relationship investments and commitment. *British Journal of Guidance & Counselling*, 1-16.

Öztahtacı, D. (2017). *Evli kadınlarda evlilik doyumu, yetişkin bağlanma stilleri ve depresyon düzeyinin ilişkisinin incelenmesi [Examining the relationship between marital satisfaction, adult attachment styles and depression level in married women]* (Publication No. 486238) [Master's thesis, Hasan Kalyoncu Üniversitesi]. Ulusal Tez Merkezi.

Öz, T., & Tatar, A. (2020). Evlilik Doyumu ile Depresyon, Mutluluk ve Psikolojik İyi Oluş Arası İlişkide Evlilik Süresinin Aracı Rolü [The Mediating Role of Marriage Duration in the Relationship Between Marital Satisfaction and Depression, Happiness and Psychological Well-Being]. *Humanistic Perspective*, *2*(1), 18-31.

Sarıçam, H. (2018). The Psychometric properties of Turkish version of Depression Anxiety Stress Scale-21 (DASS-21) in health control and clinical samples. *Journal of Cognitive Behavioral Psychotherapy and Research, 7*(1), 19–30. https://doi.org/10.5455/JCBPR.274847

Sanders, D., & Wills, F. (2003). *Counselling for anxiety problems*. Sage.

Sanderson, W. C., DiNardo, P. A., Rapee, R. M., & Barlow, D. H. (1990). Syndrome comorbidity in patients diagnosed with a DSM-III-R anxiety disorder. *Journal of Abnormal Psychology*, *99*(3), 308-312. https://doi.org/10.1037//0021-843x.99.3.308

Schaer, M., Bodenmann, G., & Klink, T. (2008). Balancing work and relationship: Couples Coping Enhancement Training (CCET) in the workplace. *Applied Psychology*, *57*(1), 71-89.

Schmid, K., Phelps, E., & Lerner, R. (2011). Constructing positive futures: Modeling the relationship between adolescents' hopeful future expectations and intentional sell regulation in predicting positive youth development. *Journal of Adolescence*, *6* (34), 1127-1135. https://doi.org/10.1016/j.adolescence.2011.07.009

Schulz, M. S., Cowan, P. A., Pape Cowan, C., & Brennan, R. T. (2004). Coming home upset: Gender, marital satisfaction, and the daily spillover of workday experience into couple interactions. *Journal of Family Psychology*, *18*(1), 250.

Schokker, M. C., Stuive, I., Bouma, J., Keers, J. C., Links, T. P., Wolffenbuttel, B. H., & Hagedoorn, M. (2010). Support behavior and relationship satisfaction in couples dealing with diabetes: Main and moderating effects. *Journal of Family Psychology*, *24*(5), 578. https://doi.org/10.1037/a0021009

Schulz, M. S., Cowan, P. A., Cowan, C. P., & Brennan, R.T. (2004). Coming home upset: gender, marital satisfaction, and the daily spillover of workday experience into couple interactions. *Journal of Family Psychology*, *18*(1), 250-263.

Sheykhi, M. T. (2020). Worldwide increasing divorce rates: A sociological analysis. *Konfrontasi: Jurnal Kultural, Ekonomi Dan Perubahan Sosial*, *7*(2), 116-123.

Šimunić, A., & Gregov, L. (2012). Conflict between work and family roles and satisfaction among nurses in different shift systems in Croatia: A questionnaire survey. *Archives of Industrial Hygiene and Toxicology*, *63*(2), 189-197.

Sivam, R. W., & Chang, W. C. (2016). Occupational stress: The role of psychological resilience in the ecological transactional model. *European Scientific Journal*, *12*(14).

South, S.J. (2001). Time dependent effects of wives' employment on marital dissolution. *American Sociological Review, 66,* 226-245. https://doi.org/10.2307/2657416.

Soysal, A. (2009). Farklı sektörlerde çalışan iş görenlerde örgütsel stres kaynakları: Kahramanmaraş ve Gaziantep'te bir araştırma [Organizational stress sources in employees working in different sectors: A research in

Kahramanmaraş and Gaziantep.]. *Süleyman Demirel Üniversitesi İktisadi ve İdari Bilimler Fakültesi Dergisi*, *14*(2), 333-359.

Spanier, G. B., & Lewis, R. A. (1980). Marital quality: A review of the seventies. *Journal of Marriage and the Family*, *42*, 825–840.

Stevens, J. P. (2009). *Applied multivariate statistics for the social sciences* (5th ed.). Taylor and Francis Group.

Stevenson, B., & Wolfers, J. (2007). Marriage and divorce: Changes and their driving forces. *Journal of Economic Perspectives*, *21*(2), 27-52.

Story, L., & Bradbury, T. H. (2004). Understanding marriage and stress: Essential questions and challenges, *Clinical Psychology Review*, 23, 1139-1162.

Tabachnick, B. G., & Fidell, L. S. (2007). *Using multivariate statistics* (5th ed.). Allyn and Bacon.

Taghva A, Yazdani A, Ebrahimi MR, Alizadeh K, & Sakhabakhsh M. (2013). Prevalence of depression in psychiatric nurses and comparison with other parts of the Aja hospitals. *Nurse and Physician within War*, 23(24), 11-16.

Tarı, N. (2022). *Yalnızlık, depresyon ve anksiyetenin evlilik doyumu ile ilişkisinin incelenmesi* [Examining the relationship between loneliness, depression and anxiety and marital satisfaction] (Publication No. 748287) [Master's thesis, İstanbul Gelişim Üniversitesi]. Ulusal Tez Merkezi.

Taşköprü, M. (2013). *Evlilik doyumu ile problem çözme becerileri, stresle başa çıkma ve evlilik süresi arasındaki ilişkinin incelenmesi [Examining the relationship between marital satisfaction, problem solving skills, coping with stress, and duration of marriage]* (Master's thesis, İstanbul Bilim University, Institute of Social Sciences). Demiroglu Science University. http://acikerisim.demiroglu.bilim.edu.tr:8080/xmlui/handle/11446/44

Ullman, J. B. (2007). Structural equation modeling. In B. G. Tabachnick & L. S. Fidell (Eds.), *Using multivariate statistics* (pp. 676–780). Allyn & Bacon.

Umberson, D., & Wang, Y. (2022). Dyadic coping and marital quality in same-sex and different-sex marriages. *Journal of Social and Personal Relationships*, *40*(3), 996-1017. https://doi.org/10.1177/0265407522112309

Vangelisti, A. L. (1997). Gender differences, similarities, and interdependencies: Some problems with the different cultures perspective. *Personal Relationships*, *4*, 243–253. https://doi.org/10.1111/j.1475-6811.1997.tb00143.x

Vedes, A., Nussbeck, F. W., Bodenmann, G., Lind, W., & Ferreira, A. (2013). Psychometric properties and validity of the dyadic coping inventory in Portuguese. *Swiss Journal of Psychology, 72*(3), 149–157. https://doi.org/10.1024/1421-0185/a000108

Yıldız, M. A., & Baytemir, K. (2016). Evli bireylerde evlilik doyumu ile yaşam doyumu arasındaki ilişkide benlik saygısının aracılığı [The mediation of self-esteem in the relationship between marital satisfaction and life satisfaction in married individuals]. *İnönü Üniversitesi Eğitim Fakültesi Dergisi*, *17*(1).

Yıldız, S. & Yıldız, S. (2009). Bullying ve depresyon arasındaki ilişki: Kars ilindeki sağlık çalışanlarında bir araştırma [The relationship between bullying and depression: A study among healthcare workers in Kars province]. *İstanbul Ticaret Üniversitesi Sosyal Bilimler Dergisi*, *8*(15), 133-150.

Yıldız, Ö. Z. (2018). *Evlilik doyumunun öncülleri ve sonuçları: Depresyon, kaygı, erken dönem uyumsuz şemalar* [*Antecedents and consequences of marital satisfaction: Depression, anxiety, early maladaptive schemas*] (Publication No. 508895) [Master's thesis, Işık University]. Ulusal Tez Merkezi.

Yogev, Sara (1986). Relationships between Stress and Marital Satisfaction among Dual-Earner Couples. Women & Therapy, 5(2-3), 313–330. https://doi.org/10.1300/J015V05N02_29

Yokotani, K., & Kurosawa, T. (2015). A pilot examination of dyadic coping inventory among Japanese married couples. *Psychologia, 58*(3), 155-164.

Yusoff, M. S. B., Rahim, A. F. A., Baba, A. A., Ismail, S. B., & Pa, M. N. M. (2013). Prevalence and associated factors of stress, anxiety, and depression among prospective medical students. *Asian Journal of Psychiatry, 6*(2), 128-133. https://doi.org/10.1016/j.ajp.2012.09.012

Waite, L., & Gallagher, M. (2001). *The case for marriage: Why married people are happier, healthier and better off financially*. Crown.

Westman, M. (2001). Stress and strain crossover. *Human Relations, 54*(6), 717-751.

White, L. K. (1994). Growing up with single parent and stepparents: Long-term effects on family solidarity. *Journal of Marriage and the Family, 56*, 935–948.

Whisman, M. A. (2001). Marital adjustment and outcome following treatments for depression. *Journal of Consulting and Clinical Psychology*, *69*(1), 125.

Whisman, M. A., & Uebelacker, L. A. (2009). Prospective associations between marital discord and depressive symptoms in middle-aged and older adults. *Psychology and Aging*, *24*(1), 184. https://doi.org/10.1037/a0014759

Whisman, M. A., Uebelacker, L. A., & Weinstock, L. M. (2004). Psychopathology and marital satisfaction: the importance of evaluating both partners. *Journal of Consulting and Clinical psychology*, 72(5), 830. https://doi.org/10.1037/0022-006x.72.5.830

Woodward, A. J., Carless, S. A., & Findlay, B. M. (2001). A psychometric evaluation of the irrational beliefs inventory in a marital context. *Australian Psychologist*, *36*(3), 255-261. https://doi.org/10.1080/00050060108259664

Wunderer, E., & Schneewind, K. A. (2008). The relationship between marital standards, dyadic coping and marital satisfaction. *European Journal of Social Psychology*, *38*(3), 462-476. https://doi.org/10.1002/ejsp.405

APPENDICES

A. APPROVAL OF THE ETHICS COMMITTEE

TED ÜNİVERSİTESİ
İNSAN ARAŞTIRMALARI ETİK KURULU
ETİK KURUL KARARLARI
Sayı: 2023-14 Tarih: 27.07.2023

Toplantı Sayısı:	2023-14
Toplantı Tarihi:	27 Temmuz 2023
Toplantı Saati:	12.00
Toplantı Yeri:	Zoom üzerinden yapılmıştır.
Katılanlar:	Dr. Öğr. Üyesi Kıymet Duygu ERDAŞ - Başkan Dr. Öğr. Üyesi **Duygu Onay Çöker**- Raportör Prof. Dr. Mehmet Ali KÖKPINAR - Üye Dr. Öğr. Üyesi Çağla Öneren ŞENDİL - Üye Dr. Öğr. Üyesi Şule Akdoğan KILINÇ – Üye Dr. Öğr. Üyesi Melike Ünal GEZER - Üye Dr. Öğr. Üyesi Elçin Emre AKDOĞAN - Üye Dr. Öğr. Üyesi Beril Türkoğlu DEMİREL - Üye
Raportör:	Dr. Öğr. Üyesi **Duygu Onay Çöker** - Raportör

GÖRÜŞME MADDELERİ

G.05 : TED Üniversitesi, Eğitim Bilimleri Bölümü, Rehberlik ve Psikolojik Danışmanlık Anabilim Dalı Öğretim Üyesi Dr. Öğr. Üyesi Sıdıka Burcu Üçok' un "Evlilik doyumu, iş stresi ve psikolojik belirtiler arasındaki ilişkide çift olarak stresle baş etme ve başa çıkma öz yeterliliğin yordayıcı rolü" başlıklı çalışmasının araştırma etiğine uygunluğu görüşüldü.

Karar 2023-14/05 : TED Üniversitesi, Eğitim Bilimleri Bölümü, Rehberlik ve Psikolojik Danışmanlık Anabilim Dalı Öğretim Üyesi Dr. Öğr. Üyesi Sıdıka Burcu Üçok' un "Evlilik doyumu, iş stresi ve psikolojik belirtiler arasındaki ilişkide çift olarak stresle baş etme ve başa çıkma öz yeterliliğin yordayıcı rolü" başlıklı çalışmasına

KOŞULLU ONAY KARARI VERİLDİ

Sayfa 1 / 3

A-2. PERMISSION LETTER FOR TURKISH ADAPTATION OF DYADIC COPING INVENTORY (DCI)

Merve Yavuzcan
Sayın İdil Kurt Hocam, Ben Fahriye Merve Demir. TED Üniversitesi Rehberlik ve Psikolojik Danışma yüksek lisans öğrencisiyim. Prof. Dr. Turan Akbaş ile birlikte,

İDİL EREN KURT
Alıcı: ben

Merhaba, çalışmanızda başarılar dilerim.

Sevgiler

Dr. Öğr. Üyesi İdil Eren KURT
Çukurova Üniversitesi-Eğitim Fakültesi
Eğitim Bilimleri Bölümü
PDR Anabilim Dalı
Adana/ TÜRKİYE
Telefon:

Çukurova University- Faculty of Education
Department of Counseling and Guidance
Adana/TURKEY
Phone:

Merve Yavuzcan < >, 3 Nis 2023 Pzt, 18:53 tarihinde şunu yazdı:

A-3. PERMISSION LETTER FOR TURKISH ADAPTATION OF DEPRESSİON ANXIETY STRESS SCALE (DASS-21)

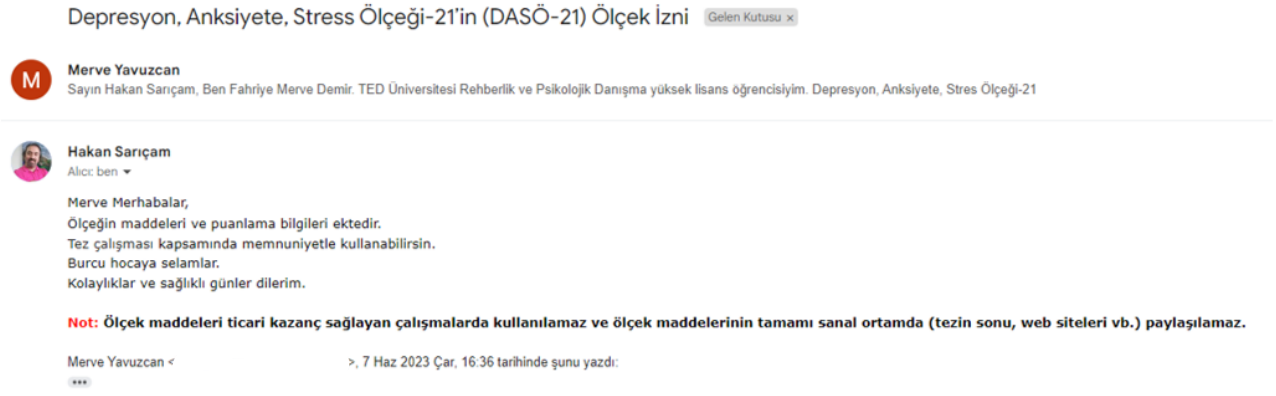

Depresyon, Anksiyete, Stress Ölçeği-21'in (DASÖ-21) Ölçek İzni Gelen Kutusu ×

Merve Yavuzcan
Sayın Hakan Sarıçam, Ben Fahriye Merve Demir. TED Üniversitesi Rehberlik ve Psikolojik Danışma yüksek lisans öğrencisiyim. Depresyon, Anksiyete, Stres Ölçeği-21

Hakan Sarıçam
Alıcı: ben

Merve Merhabalar,
Ölçeğin maddeleri ve puanlama bilgileri ektedir.
Tez çalışması kapsamında memnuniyetle kullanabilirsin.
Burcu hocaya selamlar.
Kolaylıklar ve sağlıklı günler dilerim.

Not: Ölçek maddeleri ticari kazanç sağlayan çalışmalarda kullanılamaz ve ölçek maddelerinin tamamı sanal ortamda (tezin sonu, web siteleri vb.) paylaşılamaz.

Merve Yavuzcan < >, 7 Haz 2023 Çar, 16:36 tarihinde şunu yazdı:

A-4. PERMISSION LETTER FOR MATIRAL SATISFACTION SCALE (MSS)

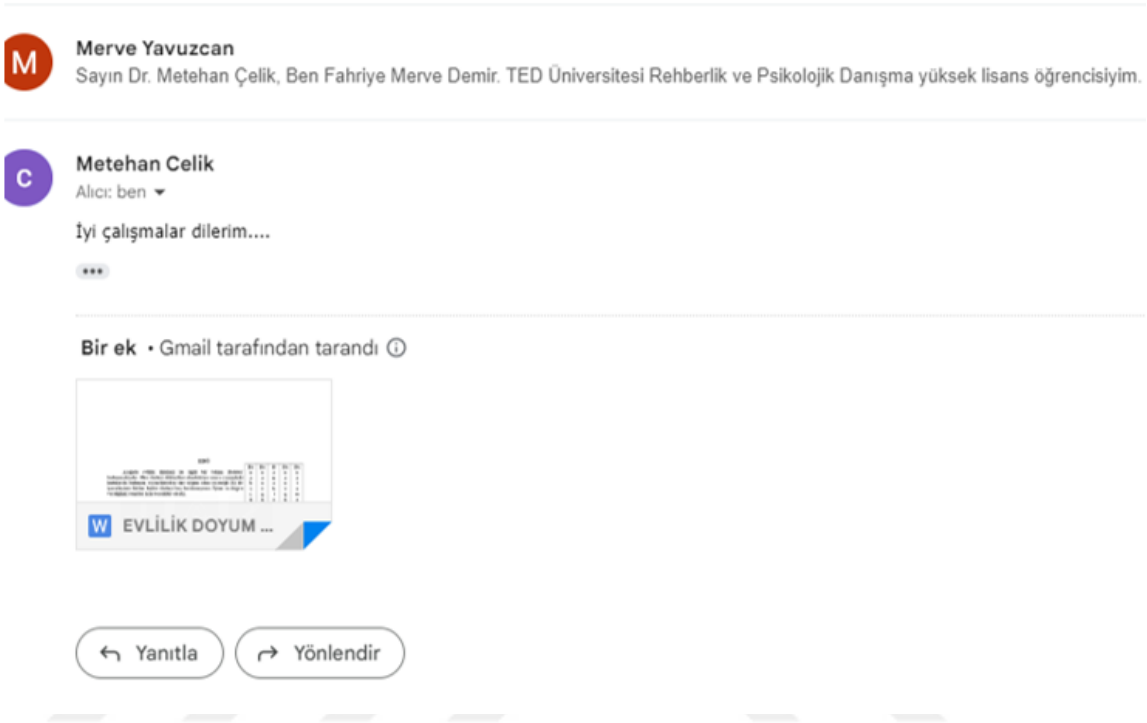

B. INFORMED CONSENT FORM

Sayın Katılımcı,

Bu araştırma, TED Üniversitesi, Eğitim Bilimleri Bölümü, Rehberlik ve Psikolojik Danışmanlık programında öğretim üyesi olan Dr. S. Burcu Üçok danışmanlığında, F.Merve Demir tarafından yürütülmektedir. Araştırmanın amacı Türkiye'de yaşayan çift kariyerli evli çiftlerin psikolojik semptomları ve evlilik doyumu arasındaki ilişkide çift olarak pozitif baş etmelerinin aracı rolünün incelenmesidir. Bu çalışmanın katılımcılarını çift kariyerli, evli, Türkiye'de yaşayan katılımcılar oluşturmaktadır.

"Doyum ve Psikolojik Semptomlar Arasındaki İlişkide Stresle Çift Olarak Pozitif Baş Etmenin Aracı Rolünün İncelenmesi" isimli bu araştırmaya katılımınızı onayladığınız takdirde, 01.09.2023-30.11.2023 tarihleri arasında sizin için uygun olan bir zamanda projenin katılımcısı olmanız ve sizinle çevrimiçi paylaşılacak olan ölçek setini doldurmanız istenecektir. Tüm ölçekleri yanıtlamak 20-25 dakika sürmektedir. Çalışma süresince ve sonrasında hiçbir bilginiz araştırmacı dışındaki hiç kimseyle izniniz dışında paylaşılmayacaktır. Bu çalışma kapsamında elde edilecek olan bilimsel bilgiler sadece araştırmacı tarafından yapılan bilimsel yayınlarda, sunumlarda ve eğitim amaçlı çevrimiçi bir ortamda paylaşılacaktır. Toplanan veriler bilgisayarda şifreli bir dosyada tutulacaktır ve araştırmacı dışında kimsenin erişimine açık olmayacaktır.

Bu çalışmaya katılım gönüllük esasına dayalıdır. Maksimum 20-25 dakika sürecek bu uygulamada ölçek setinde yer alan sorular sizde herhangi bir rahatsızlık yaratırsa uygulamaları nedenini açıklamaksızın yarıda bırakıp araştırmadan çıkmakta serbestsiniz. Böyle bir durumda vermiş olduğunuz bilgilerin araştırmacı tarafından kullanılması ancak sizin onayınızla mümkün olacaktır. Bu çalışmaya katıldığınız için şimdiden teşekkür ederiz. Çalışma hakkında daha fazla bilgi almak ve yanıtlanmasını istediğiniz sorularınız için araştırmayı yürüten F.Merve Demir ile (E-posta: , telefon) iletişim kurabilirsiniz.

Bu çalışmaya tamamen gönüllü olarak katılıyorum ve istediğim zaman yarıda kesip çıkabileceğimi biliyorum. Bu projeye, benimle çevrimiçi paylaşılacak olan anketleri doldurarak dahil olacağımı biliyorum. Verdiğim bilgilerin bilimsel amaçlı yayımlarda kullanılmasını kabul ediyorum. Verilerimin, bilimsel makaleler, akademik sunumlar ve çevrimiçi bir eğitim ortamı dışında kesinlikle kullanılmayacağını biliyorum.

Çalışmaya katılmak istiyorum Evet / Hayır

Araştırmaya katılımınız ve haklarınızın korunmasına yönelik sorularınız varsa ya da herhangi bir şekilde risk altında olduğunuza veya strese maruz kalacağına inanıyorsanız TED Üniversitesi İnsan Araştırmaları Etik Kurulu'na ( ) telefon numarasından veya eposta adresinden ulaşabilirsiniz.

C. SAMPLE ITEMS FROM TURKISH ADAPTATION OF DYADIC COPING INVENTORY (DCI)

The Turkish version of the dyadic coping inventory includes 37 items, rated from 1 (*never*) to 5 (*always*). The total score of (1) self-emotional-focused support, (2) partner emotional-focused support, (3) problem-focused dyadic coping, (4) self-problem-focused support, (5) partner problem-focused support, (6) delegated dyadic coping by oneself, (7) delegated dyadic coping by partner, (8) emotional-focused dyadic coping subscales was obtained which comprised the positive dyadic coping subscale of the dyadic coping inventory. The total score of (1) negative dyadic coping by oneself and (2) negative dyadic coping by partner subscales was obtained which comprised the negative dyadic coping subscale of the dyadic coping inventory.

Eşime onun desteğini, tavsiyelerini ya da yardımını takdir ettiğimi söylerim.

Eşim iyi olmadığında ya da problemleri olduğunda bunu bana davranışlarıyla gösterir

Eşime stresinin o kadar kötü olmadığını söylerim ve stresli durumlara başka açıdan bakmasına yardım ederim.

Stresli olduğumda eşimin kabuğuna çekilme eğilimi vardır.

Eşimle beraber durumu objektif bir şekilde analiz etmeye çalışır ve problemi anlaması ve değiştirmesinde ona yardım ederim.

Eşimden aldığım destekten memnunum ve bir çift olarak, stresle mücadele etme yolumuz/yöntemimiz etkili.

D. SAMPLE ITEMS FROM TURKISH ADAPTATION OF DEPRESSION ANXIETY STRESS SCALE (DASS-21)

The scale, which consists of 21 items in total, has 3 subscales. These subscales are depression, anxiety, and stress. Total scores are obtained for each subscale. The 4-point Likert-type scale is scored between 0 (*never*) and 3 (*always*).

Gevşeyip rahatlamakta zorluk çektim.

Olaylara aşırı tepki vermeye meyilliyim.

Sinirsel enerjimi çok fazla kullandığımı hissettim.

Beni yaptığım işten alıkoyan şeylere dayanamıyordum.

Birey olarak değersiz olduğumu hissettim.

Geçerli bir neden olmadığı halde korktuğumu hissettim.

E. SAMPLE ITEMS OF MARITAL SATISFACTION SCALE (MSS)

The scale consists of a total of 13 items. It is a 5-point Likert-type scale (1 = *not suitable for me at all* 5 = *completely suitable for me*). There are three subscales called family, sexuality and self. The high score obtained from the scale indicates the high level of marital satisfaction of married people.

Eşimin bana değer vermediğini hissediyorum.

Eşim anne ve babasına evliliğinden daha çok önem vermesi beni mutsuz ediyor.

Eşimin bana güven duymadığını düşünüyorum.

Eşimin ailesi ile birlikte yaşamak benim için bir kâbustur.

F. DEMOGRAPHIC FORM

1. Siz ve eşiniz belirlediğiniz ortak bir rumuzu (örneğin kaktüs, StarWars vb.) ikiniz de kendi formlarınızda aşağıda belirtilen boşluğa lütfen yazınız. Lütfen formları ayrı ayrı doldurunuz. …….
2. Yaşınız:
3. Cinsiyetiniz:
4. Şu an evli misiniz?
5. Evlilik süreniz (Ay):
6. Daha önce başka evliliğiniz/evlilikleriniz oldu mu?
7. Evet ise; bu kaçıncı evliliğiniz?
8. Çocuğunuz/çocuklarınız var mı?
9. Evet ise; kaç çocuğunuz olduğunu lütfen belirtiniz.
10. Eğitim Durumunuz:

( ) İlkokul mezunu

( ) Ortaokul mezunu

( ) Lise mezunu

( ) Lisans mezunu

( ) Lisans Üstü Eğitim (Yüksek Lisans Mezunu - Doktora Mezunu)

11. Çalışıyor musunuz?
12. Mesleğiniz?
13. Şu an bulunduğunu iş yerinde kaç senedir çalışıyorsunuz?
14. İş yerinde hangi pozisyonda çalışıyorsunuz?
15. Eşiniz çalışıyor mu?
16. Bireysel gelir durumunuz:

( ) 0 - 13400 ₺

( ) 13401 - 23401 ₺

( ) 23402 - 33402 ₺

( ) 33403 - 43403 ₺

( ) 43404 ₺ ve üzeri

17. Eşiniz ile toplam gelir durumunuz:

( ) 0 - 13400 ₺

( ) 13401 - 23401 ₺

( ) 23402 - 33402 ₺

( ) 33403 - 43403 ₺

( ) 43404 ₺ ve üzeri